Wireless Communications
From 5G and WiFi 6 to Low Power IoT

Lecture 1: Introduction Wireless Communications

Haitham Hassanieh

ILLINOIS
UNIVERSITY OF ILLINOIS AT URBANA-CHAMPAIGN

Class Logistics

Time & Location: 1 week, 2pm China time on Zoom

Instructor: Haitham Hassanieh

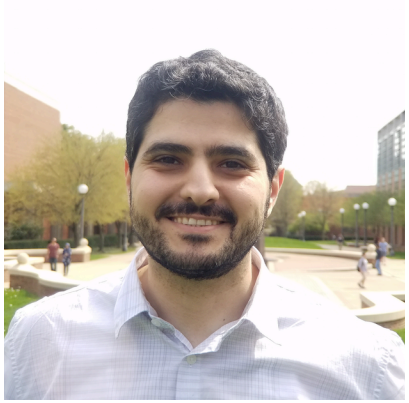

PhD from MIT, 2016

Research in Wireless Networks, Mobile Computing

Email: haitham@illinois.edu

Webpage: http://haitham.ece.illinois.edu/

Course TAs:

Junfeng Guan
(jguan8@illinois.edu)

Jitian Zhang
(jitianz2@illinois.edu)

Sohrab Madani
(smadani2@illinois.edu)

Class Logistics

http://haitham.ece.illinois.edu/WirelessSU20/

Wireless Communications: From 5G and WiFi 6 to Low Power IoT Communication (Summer 2020)

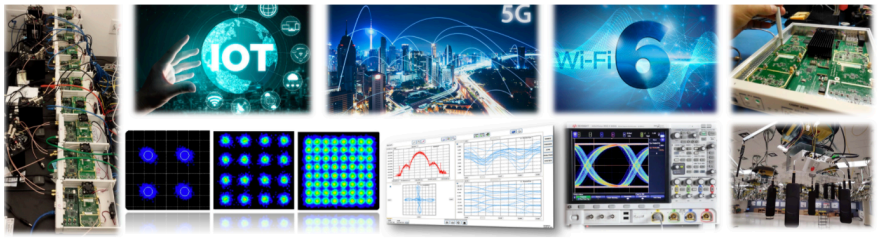

Course Description:

The goal of this course is to teach students the fundamentals of wireless communications from basic principles to the current standards for 5G cellular networks, WiFi 6, and Low Power IoT Communication. The course would take a practical systems approach breaking up the technical components of a wireless communication system both in terms analog hardware, digital processing, and software. Students will learn the components of an end to end wireless communication system including: amplifiers, mixers, AGCs, up and down-conversion, pulse shaping, synchronization, modulation, channel equalization, carrier recovery, etc. The course also covers techniques used in the latest communication systems like 5G, WiFi 6 and IoT. These include OFDM, MIMO, Multi-user MIMO, Beamforming, Millimeter Wave, OFDMA, Backscatter communication, Spread Spectrum Communication, Bluetooth, LoRA, etc. The course combines core mathematical principles with practical system design.

Instructor: Haitham Hassanieh

TAs: Jitian Zhang, Junfeng Guan, Sohrab Madani

Reading Material:

- History of Wireless Communication
- Introduction of Digital Communication (Lecture Notes)
- Modulation and Demodulation (Lecture Notes)
- A Beginner's Guide to OFDM
- WiFi 6 (802.11ax): A Cheat Sheet
- WiFi 6: What's Different, and Why it Matters
- Everything You Need to Know About 5G
- 5G and Shannon's Law
- 5G Commercialization and Trials in Korea
- Millimeter Wave Mobile Communications for 5G Cellular: It Will Work!
- 11 Internet of Things (IoT) Protocols You Need to Know About
- What are LoRa and LoRaWAN?

Schedule:

All times and dates are listed in China standard time.

#	Date	Time	Links	Lectures
1	Sun. Jul. 19	2:00 pm - 4:00 pm	[Vocabulary] [Slides]	**Lec 1. Introduction:** • Overview & Logistics • Wireless Spectrum • Up/Down Conversion • Pulse Shaping & Matched Filter.
	Sun. Jul. 19	9:00 pm - 10:00 pm		**Office Hours**
2	Mon. Jul. 20	2:00 pm - 4:00 pm		**Lec 2. Modulation:** • Coherent & Non-coherent modulaiton • BPSK, DBPSK, ASK, FSK • PSK, QAM • Maximum Likelihood, BER vs. SNR
	Mon. Jul. 20	9:00 pm - 10:00 pm		**Office Hours**
3	Tues. Jul. 21	2:00 pm - 4:00 pm		**Lec 3. Wireless Channel:** • Wireless Channel • Channel Equalization • Frame Synchronization • CFO Estimation and Recovery

- Series of 6 lectures
  - 2 hours each.
- TA office hours every day
  - Ask questions!
- Final take home quiz
  - Should take around 2 hours to complete
  - Have 24 hours time to complete and upload
  - Quiz will be mostly multiple choice and True/False questions + some short problems to solve

Class Logistics

http://haitham.ece.illinois.edu/WirelessSU20/

All times and dates are listed in China standard time.

#	Date	Time	Links	Lectures
1	Sun. Jul. 19	2:00 pm - 4:00 pm	[Vocabulary] [Slides]	**Lec 1. Introduction:** • Overview & Logistics • Wireless Spectrum • Up/Down Conversion • Pulse Shaping & Matched Filter.
	Sun. Jul. 19	9:00 pm - 10:00 pm		**Office Hours**
2	Mon. Jul. 20	2:00 pm - 4:00 pm		**Lec 2. Modulation:** • Coherent & Non-coherent modulaiton • BPSK, DBPSK, ASK, FSK • PSK, QAM • Maximum Likelihood, BER vs. SNR
	Mon. Jul. 20	9:00 pm - 10:00 pm		**Office Hours**
3	Tues. Jul. 21	2:00 pm - 4:00 pm		**Lec 3. Wireless Channel:** • Wireless Channel • Channel Equalization • Frame Synchronization • CFO Estimation and Recovery
	Tues. Jul. 21	9:00 pm - 10:00 pm		**Office Hours**
4	Wed. Jul. 22	2:00 pm - 4:00 pm		**Lec 4. OFDM:** • Orthogonal Frequency Division Multiplexing • Packet Detection • Channel and CFO Estimation • Pilots and Phase Tracking
	Wed. Jul. 22	9:00 pm - 10:00 pm		**Office Hours**
5	Thurs. Jul. 23	2:00 pm - 4:00 pm		**Lec 5. Internet of Things (IoT):** • LoRa & Chirp Spread Spectrum • Narrowband IoT • Backscatter Communication • Bluetooth, FHSS, DSSS
	Thurs. Jul. 23	9:00 pm - 10:00 pm		**Office Hours**
6	Fri. Jul. 24	2:00 pm - 4:00 pm		**Lec 6. 5G & WiFi 6:** • 5G Background • Millimeter wave communication • WiFi 6 Background • OFDMA
10	Sat. Jul. 26	2:00 pm - 1:59 pm		**Take home exam (24hrs)**

Do you own a smartphone?

- Yes
- No

Increasing Demand for Wireless Connectivity

NBC/Instagram

Wireless Networks Increasingly Prevalent

Wireless Homes

Wireless Biomedical Implants

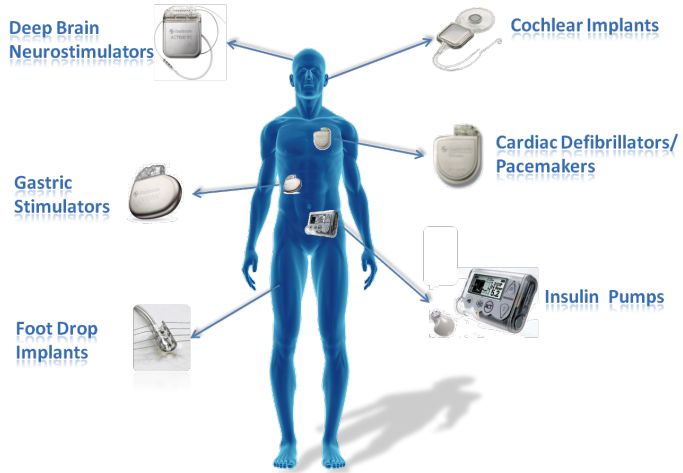

Wireless Wearables

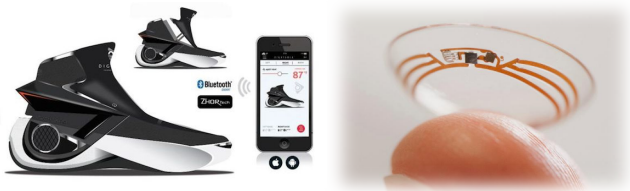

Cellular Networks

Wireless Sensors

UAVs

Wireless Data Centers

Wireless VR

Wireless Vehicles

Increasing Demand for Wireless Connectivity

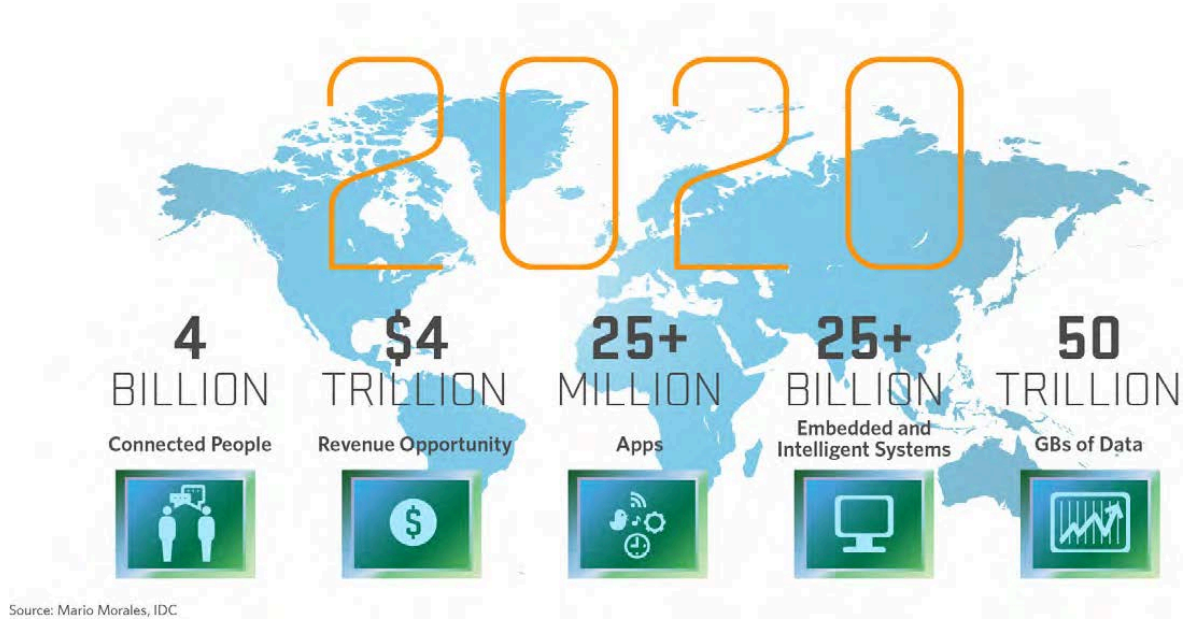

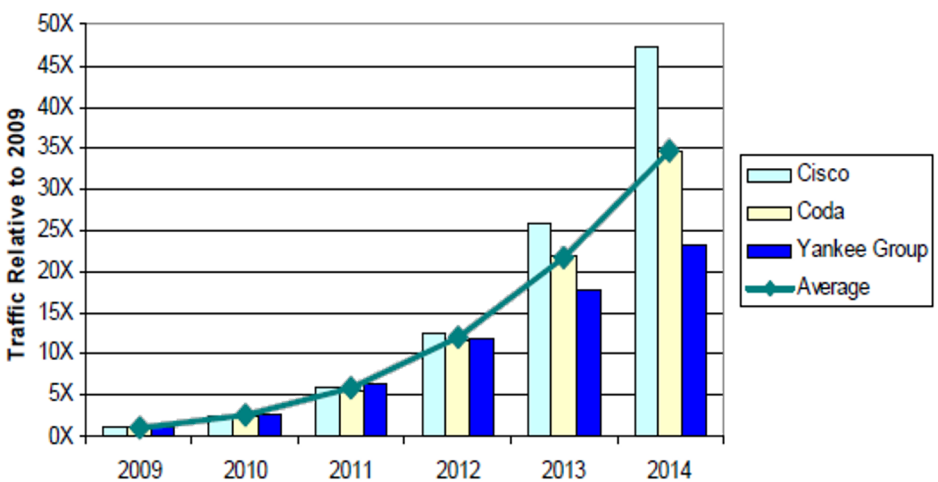

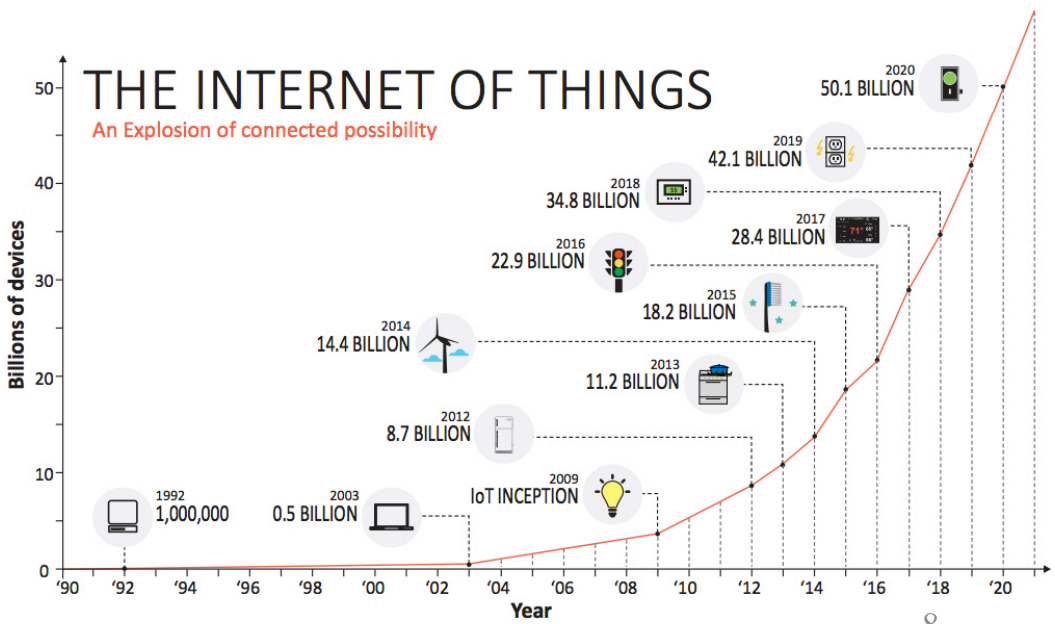

Mobile Technologies from 1G to 5G

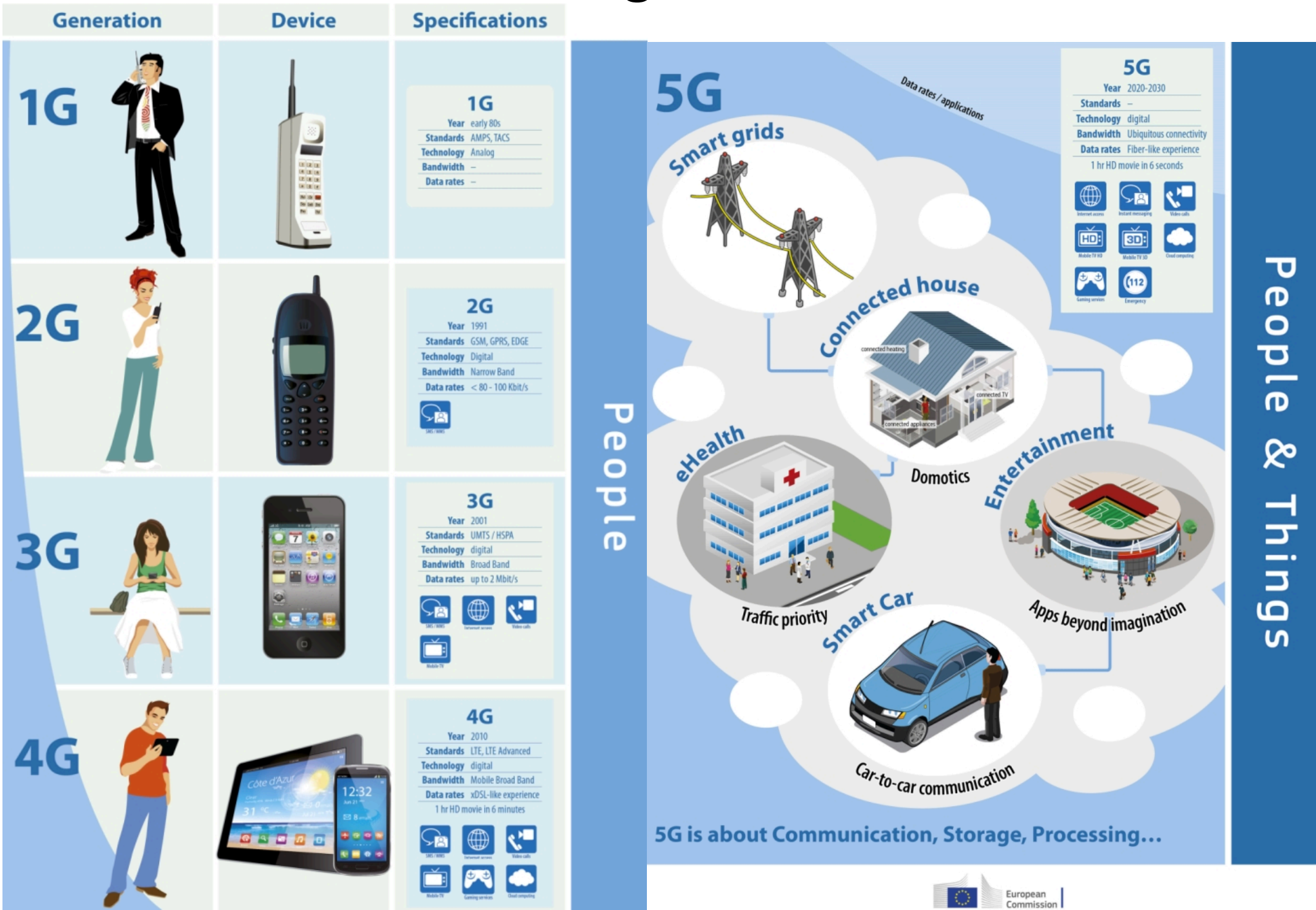

WiFi Standards from WiFi 1 to WiFi 5

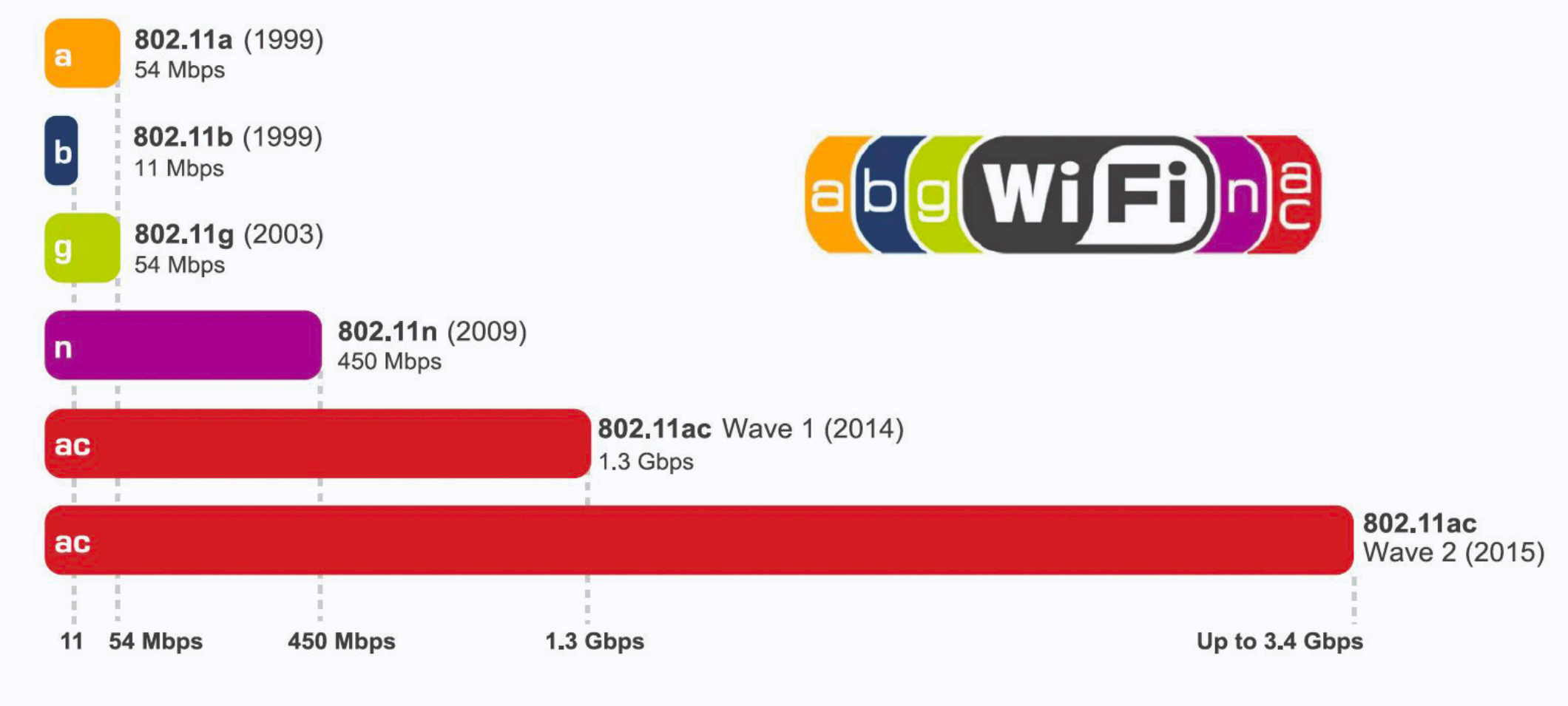

WiFi Standards from WiFi 1 to WiFi 5

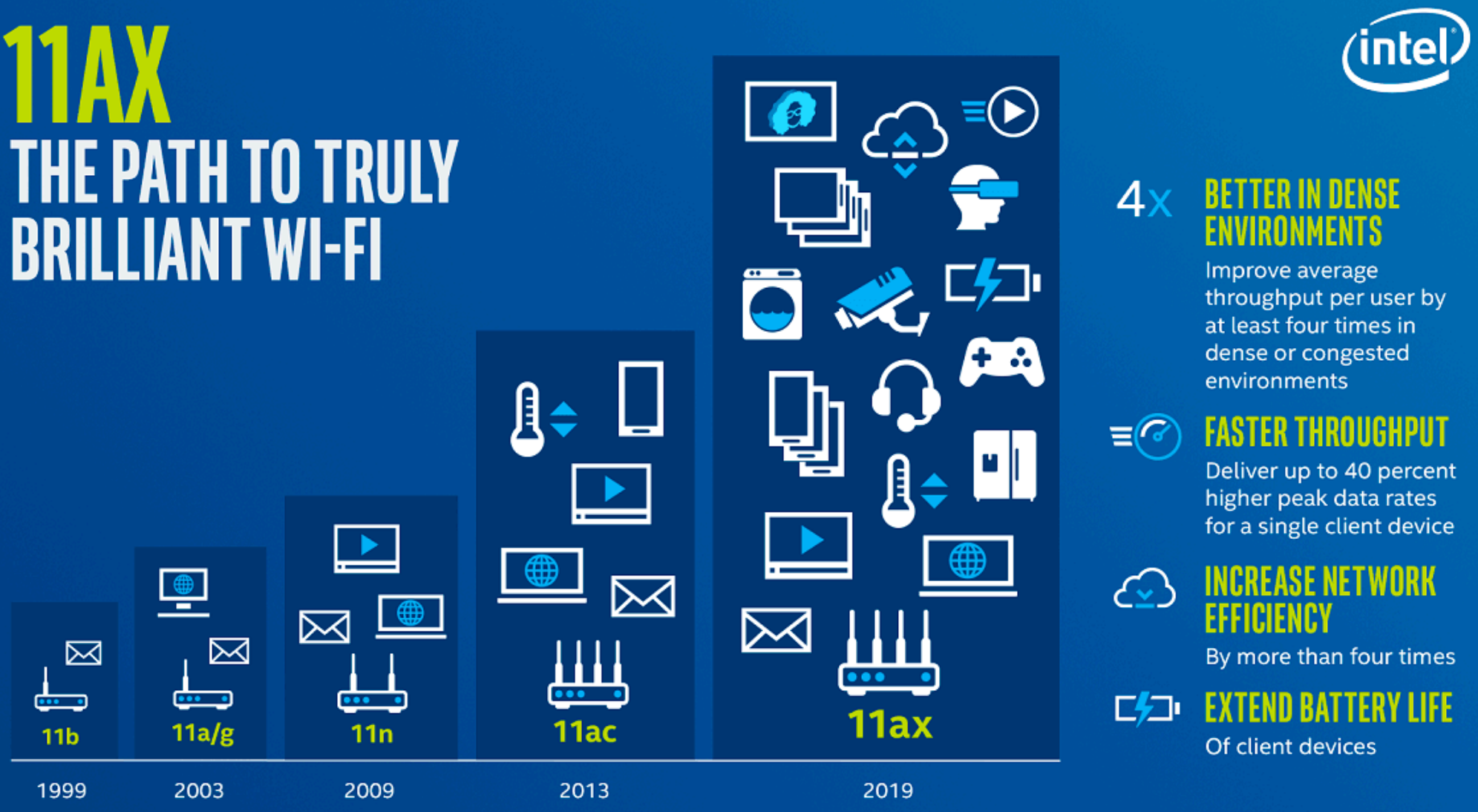

WiFi 6 & 5G Complement Each Other

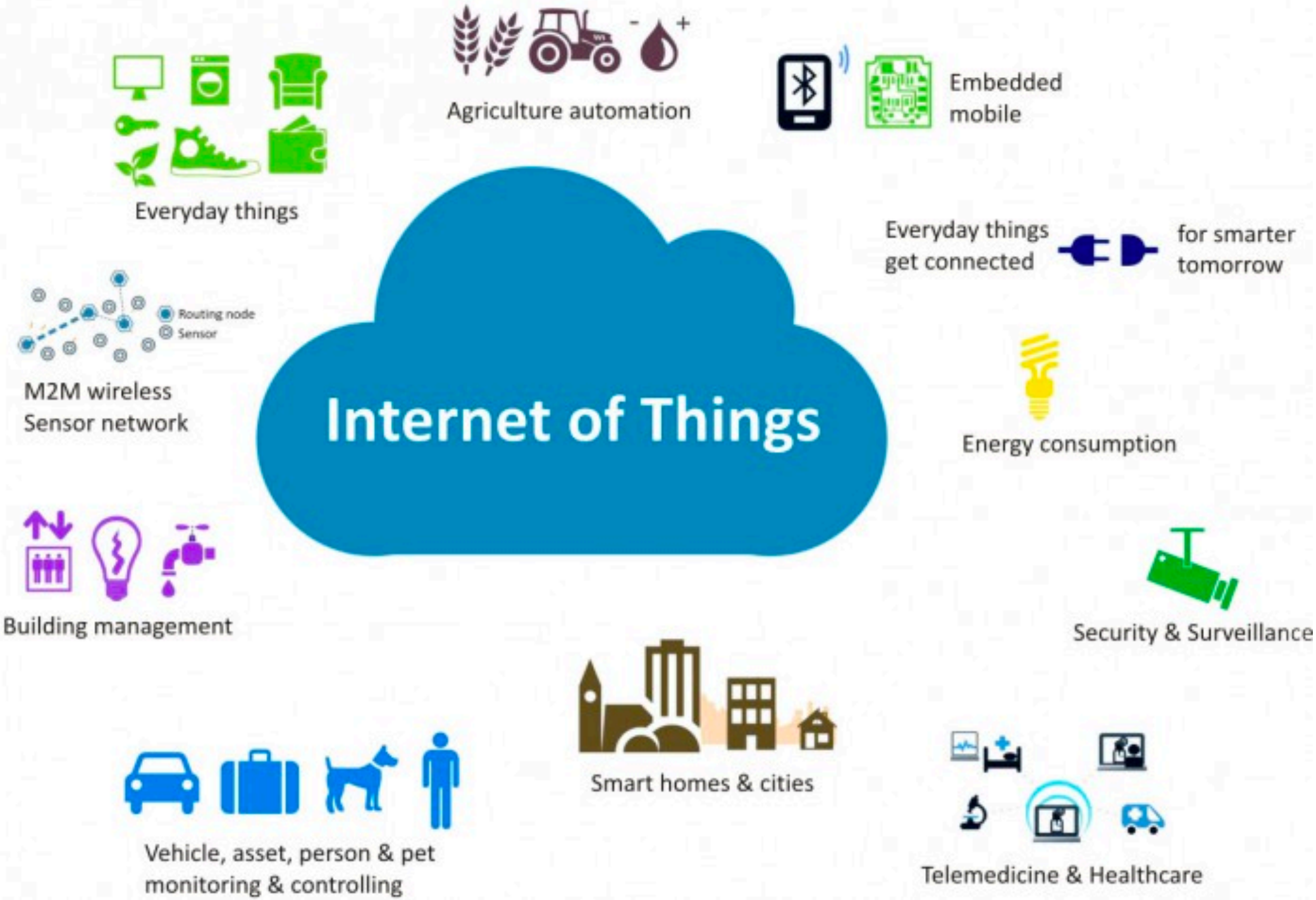
Everyday things
Agriculture automation
Embedded mobile
Everyday things get connected
for smarter tomorrow
Routing node
Sensor
M2M wireless Sensor network
Internet of Things
Energy consumption
Building management
Security & Surveillance
Smart homes & cities
Vehicle, asset, person & pet monitoring & controlling
Telemedicine & Healthcare

IoT Technologies

Wi Fi

Bluetooth®

Z-WAVE®

NFC

RFID

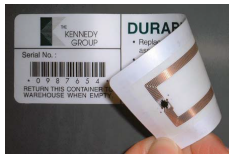

ZigBee®

Cellular

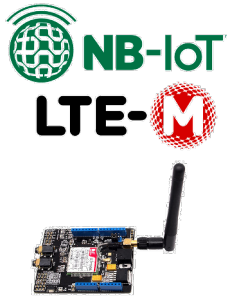

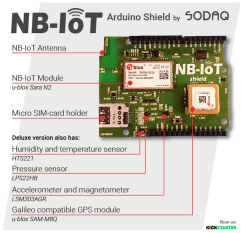

LoRa™ / sigfox / neul

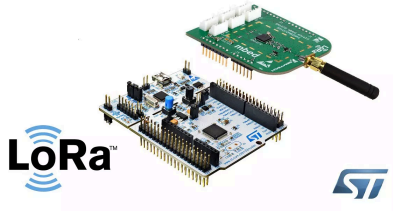

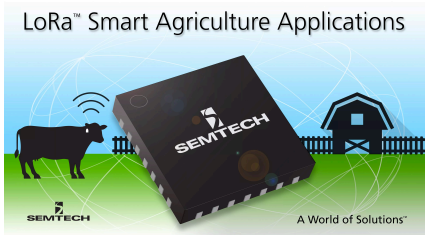

IoT Technologies

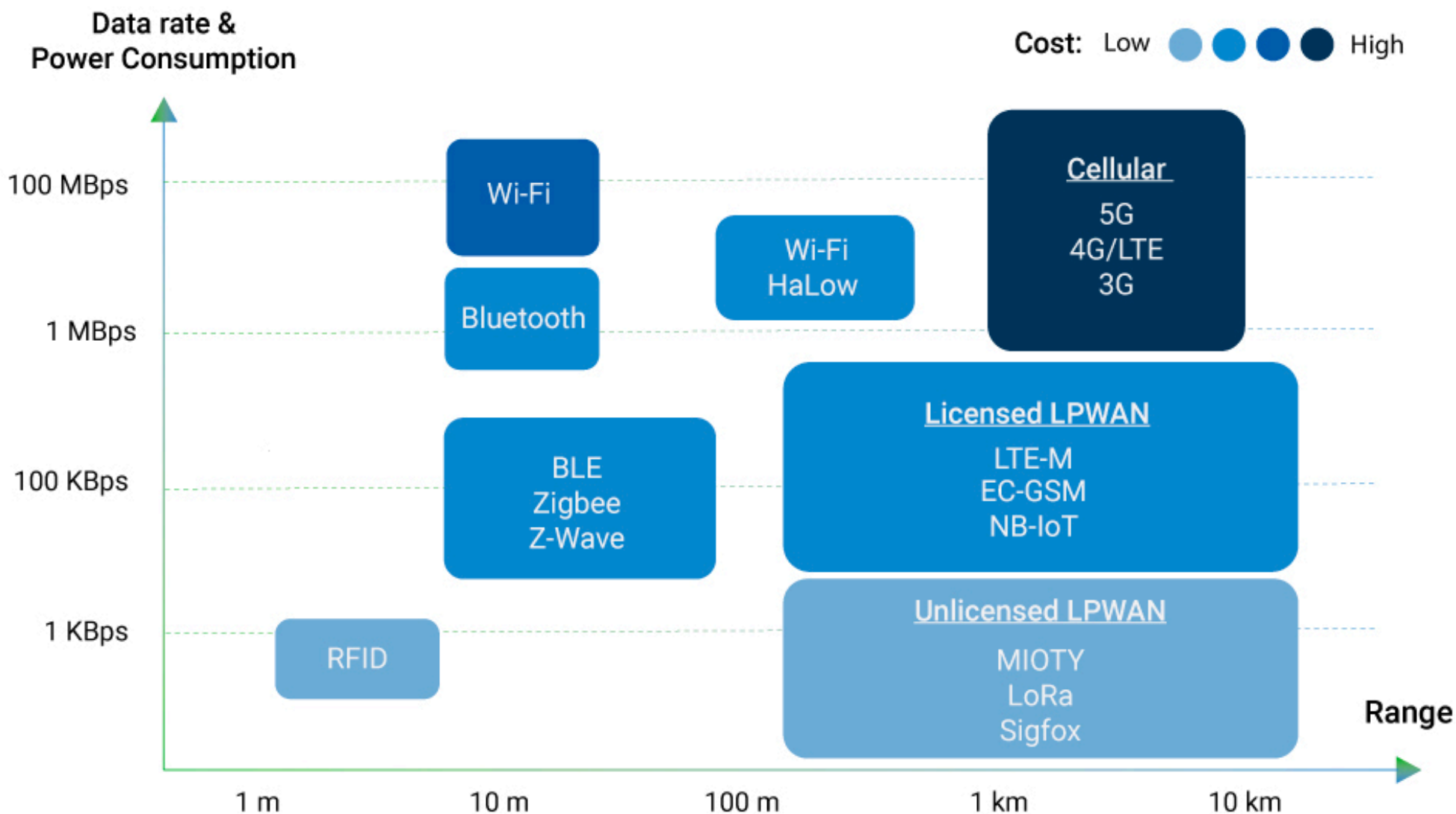

Different Applications

- Need different data rates
- Have different power budget
- Require different form factor
- Require different mobility range
- Demand the use of different channel
- Have different cost limitations

} Different Wireless Communication Technologies

Wireless Communication Systems

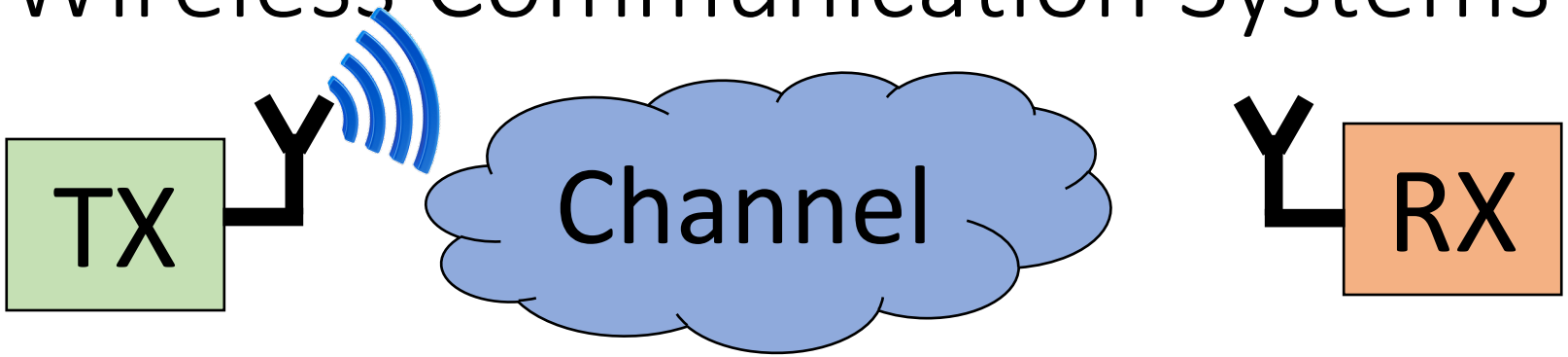

Wireless Communication System

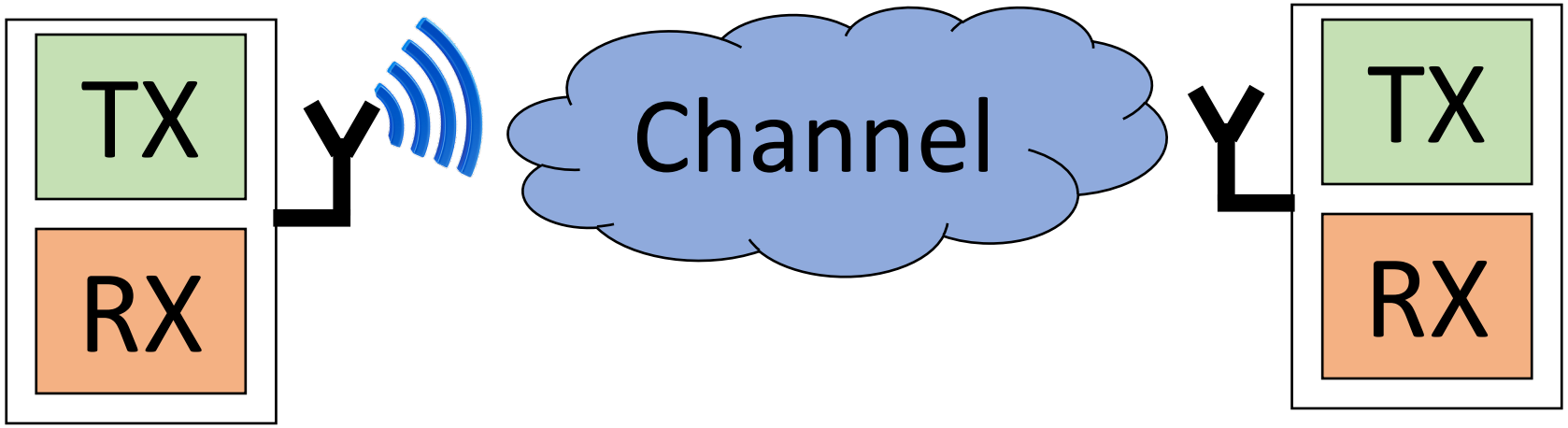

In this class:

- Learn the design of a basic principles of a wireless communication transceiver.
- Cover Some advanced topics: OFDM, CSS, BLE, …
- Cover Emerging Technologies: 5G, WiFi 6, IoT

This Lecture:

- ✓ Class Logistics
- ✓ Introduction to Wireless Communications
- ❑ Wireless Spectrum
- ❑ Transmitter & Receiver System Components
- ❑ Review of Fourier Transforms & Trigonometric Identities
- ❑ Up Conversion & Down Conversion

Which of the following concepts are your already familiar with?

A. Digital Modulation (BPSK, QAM, …)

B. Nyquist Sampling Rate

C. Convolution

D. Low Pass Filter

The Wireless Spectrum

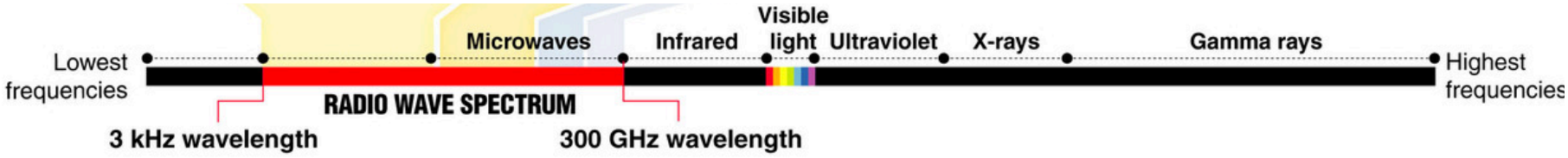

The Wireless Spectrum

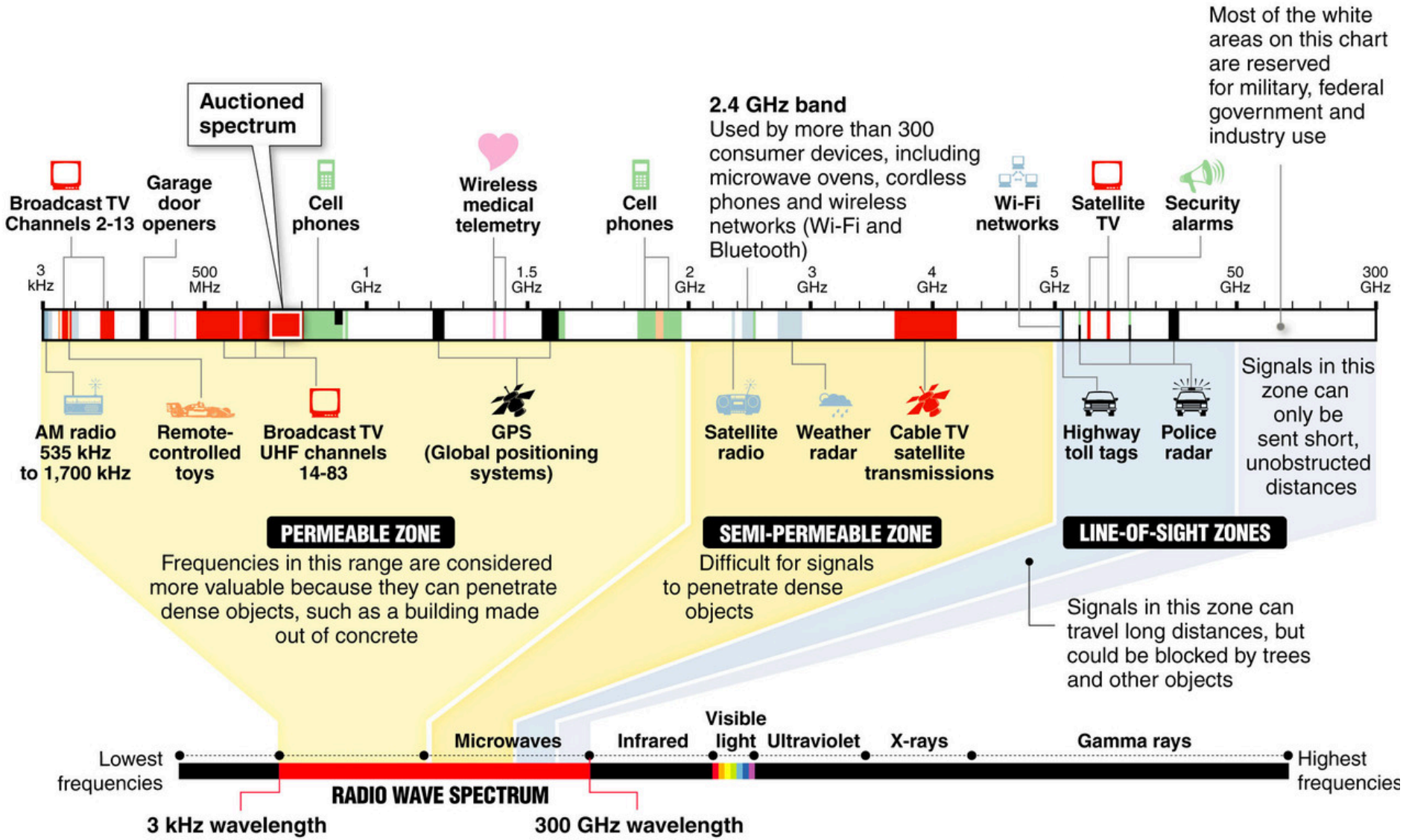

UNITED STATES FREQUENCY ALLOCATIONS

THE RADIO SPECTRUM

RADIO SERVICES COLOR LEGEND

- AERONAUTICAL MOBILE
- AERONAUTICAL MOBILE SATELLITE
- AERONAUTICAL RADIONAVIGATION
- AMATEUR
- AMATEUR SATELLITE
- BROADCASTING
- BROADCASTING SATELLITE
- EARTH EXPLORATION SATELLITE
- FIXED
- FIXED SATELLITE
- INTER-SATELLITE
- LAND MOBILE
- LAND MOBILE SATELLITE
- MARITIME MOBILE
- MARITIME MOBILE SATELLITE
- METEOROLOGICAL
- METEOROLOGICAL SATELLITE
- MOBILE
- MOBILE SATELLITE
- RADIO ASTRONOMY
- RADIODETERMINATION SATELLITE
- RADIOLOCATION
- RADIOLOCATION SATELLITE
- RADIONAVIGATION
- RADIONAVIGATION SATELLITE
- SPACE OPERATION
- SPACE RESEARCH
- STANDARD FREQUENCY AND TIME SIGNAL
- STANDARD FREQUENCY AND TIME SIGNAL SATELLITE

ACTIVITY CODE

- FEDERAL EXCLUSIVE
- FEDERAL/NON-FEDERAL SHARED
- NON-FEDERAL EXCLUSIVE

ALLOCATION USAGE DESIGNATION

SERVICE	EXAMPLE	DESCRIPTION
Primary	FIXED	Capital Letters
Secondary	Mobile	1st Capital with lower case letters

This chart is a graphic single-point-in-time portrayal of the Table of Frequency Allocations used by the FCC and NTIA. As such, it may not completely reflect all aspects, i.e. footnotes and recent changes made to the Table of Frequency Allocations. Therefore, for complete information, users should consult the Table to determine the current status of U.S. allocations.

U.S. DEPARTMENT OF COMMERCE
National Telecommunications and Information Administration
Office of Spectrum Management

JANUARY 2016

For sale by the Superintendent of Documents, U.S. Government Printing Office
Internet: bookstore.gpo.gov Phone:toll free (866) 512-1800; Washington, DC area (202) 512-1800
Facsimile: (202) 512-2250 Mail: Stop SSOP, Washington, DC 20402-0001

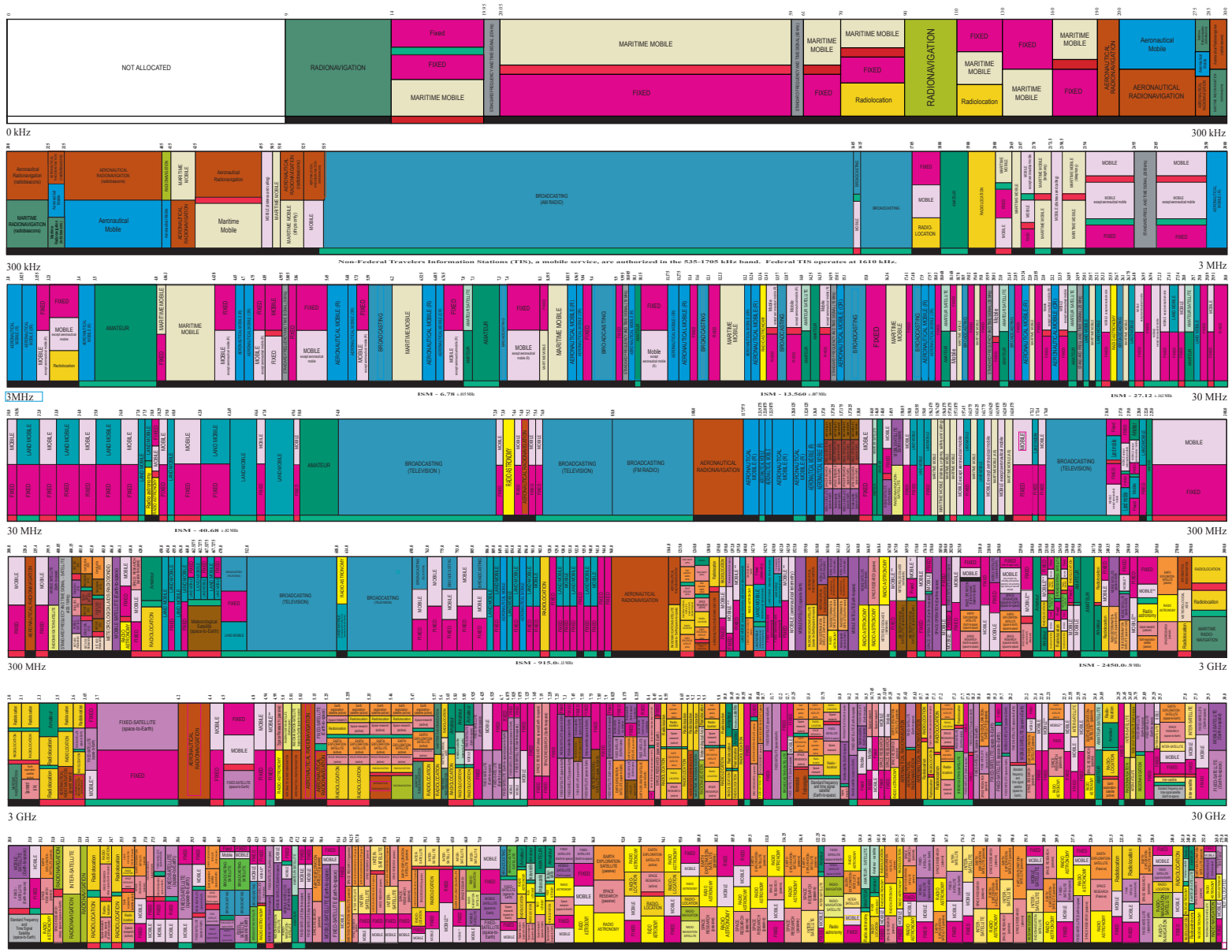

* EXCEPT AERONAUTICAL MOBILE (R)

** EXCEPT AERONAUTICAL MOBILE

PLEASE NOTE: THE SPACING ALLOTTED THE SERVICES IN THE SPECTRUM SEGMENTS SHOWN IS NOT PROPORTIONAL TO THE ACTUAL AMOUNT OF SPECTRUM OCCUPIED.

Wireless Communication System

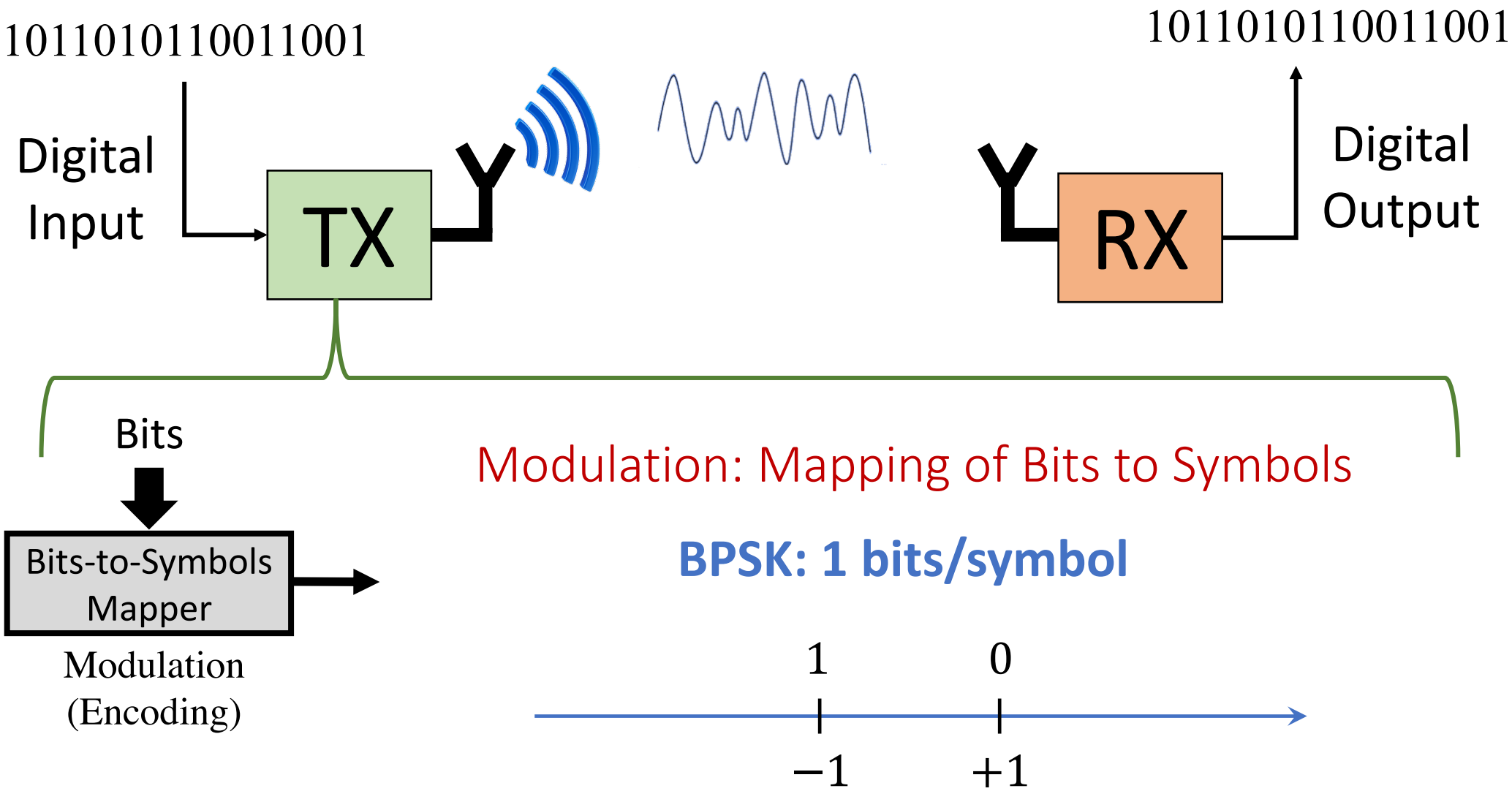

Wireless Communication System

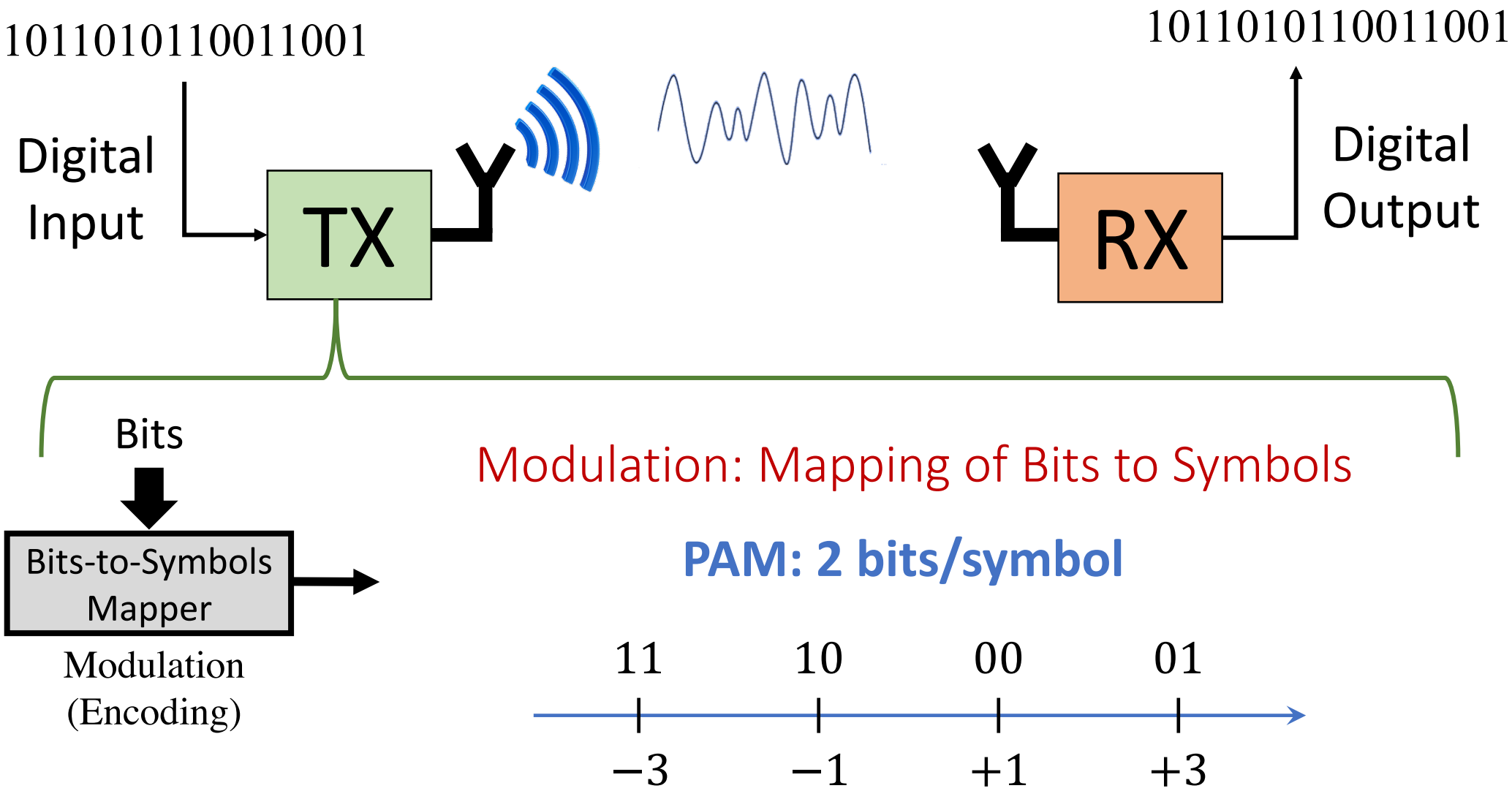

Wireless Communication System

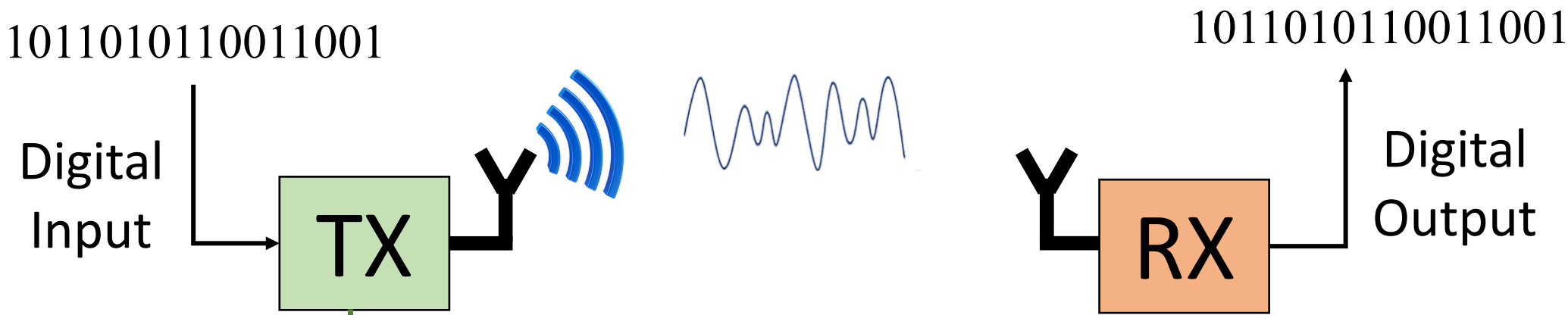

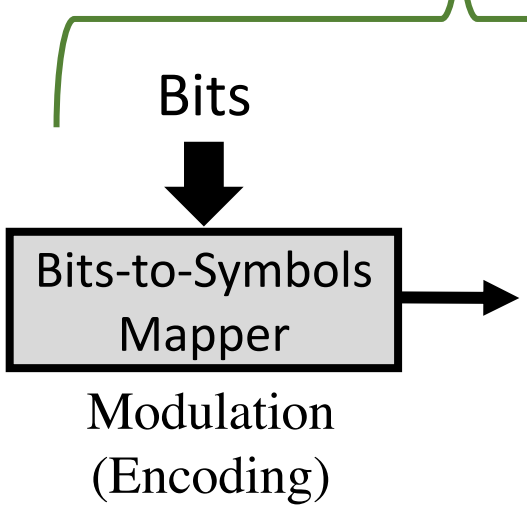

Modulation: Mapping of Bits to Symbols

16-QAM:
4 bits/symbol

Complex Symbols!

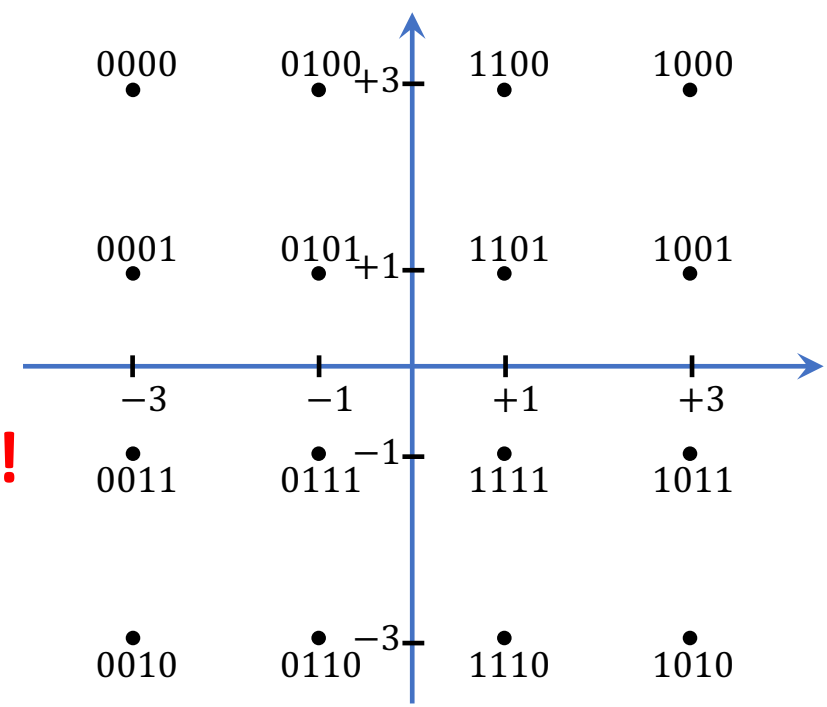

Wireless Communication System

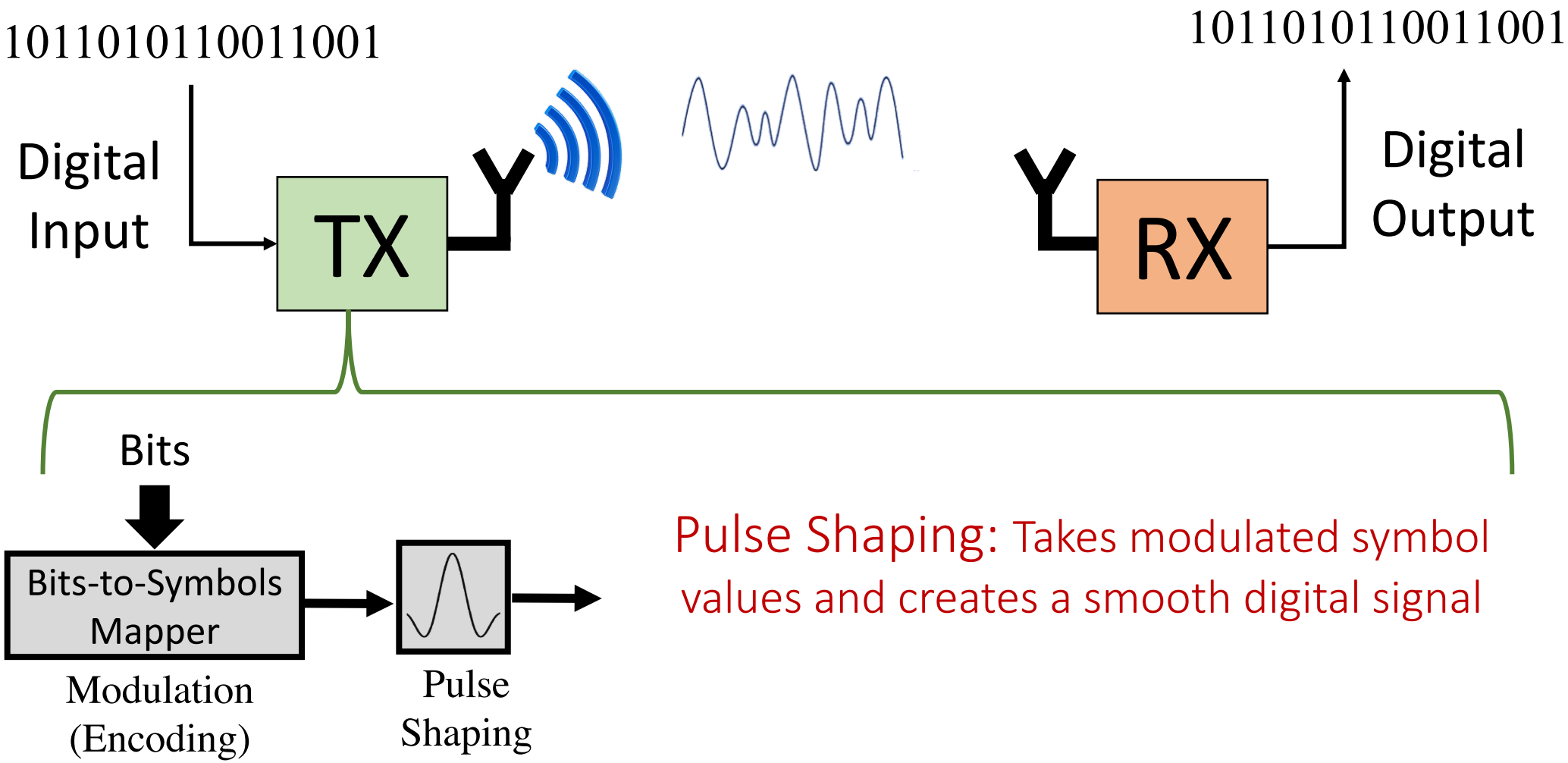

Pulse Shaping: Takes modulated symbol values and creates a smooth digital signal

Wireless Communication System

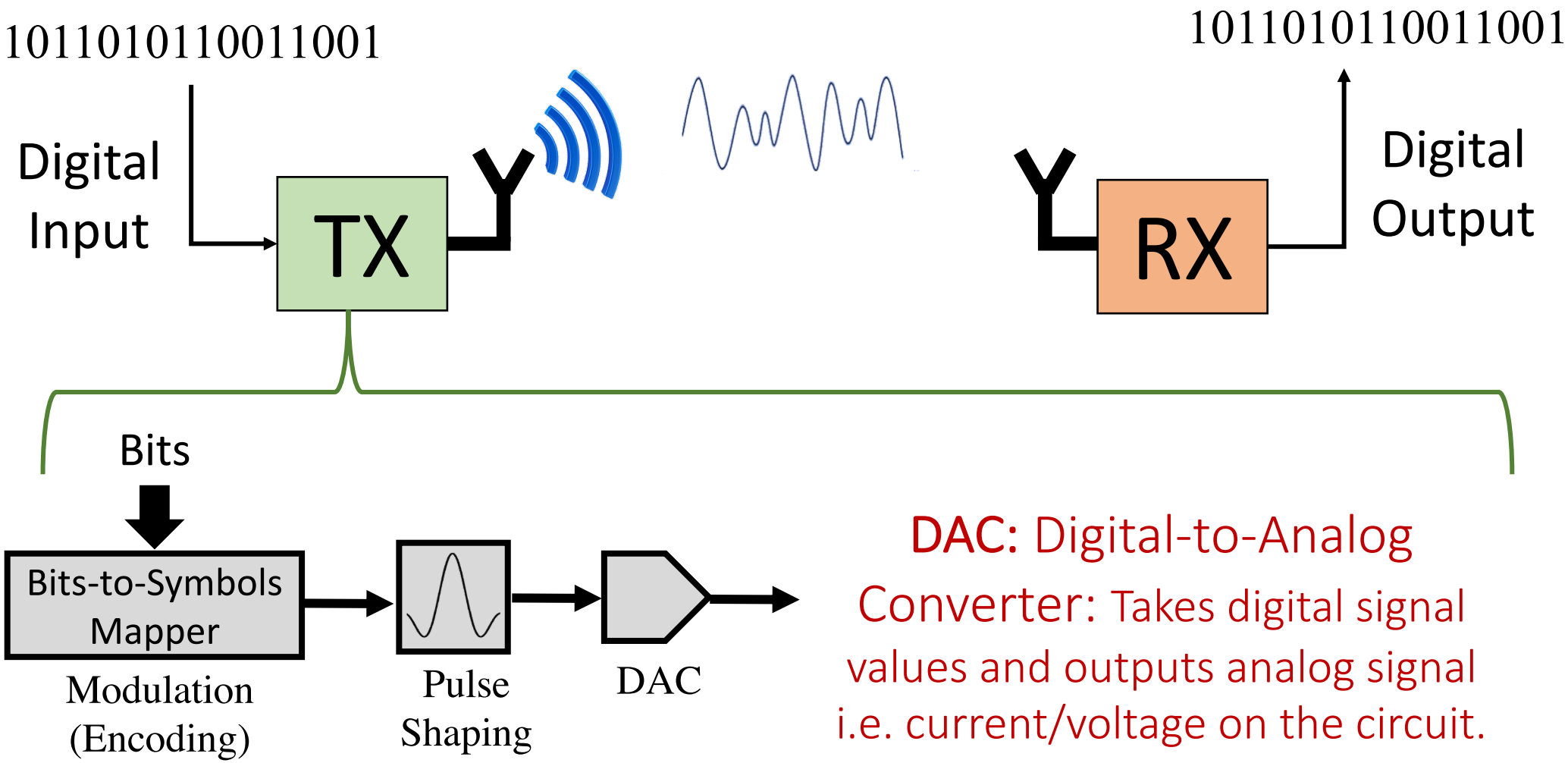

DAC: Digital-to-Analog Converter: Takes digital signal values and outputs analog signal i.e. current/voltage on the circuit.

Wireless Communication System

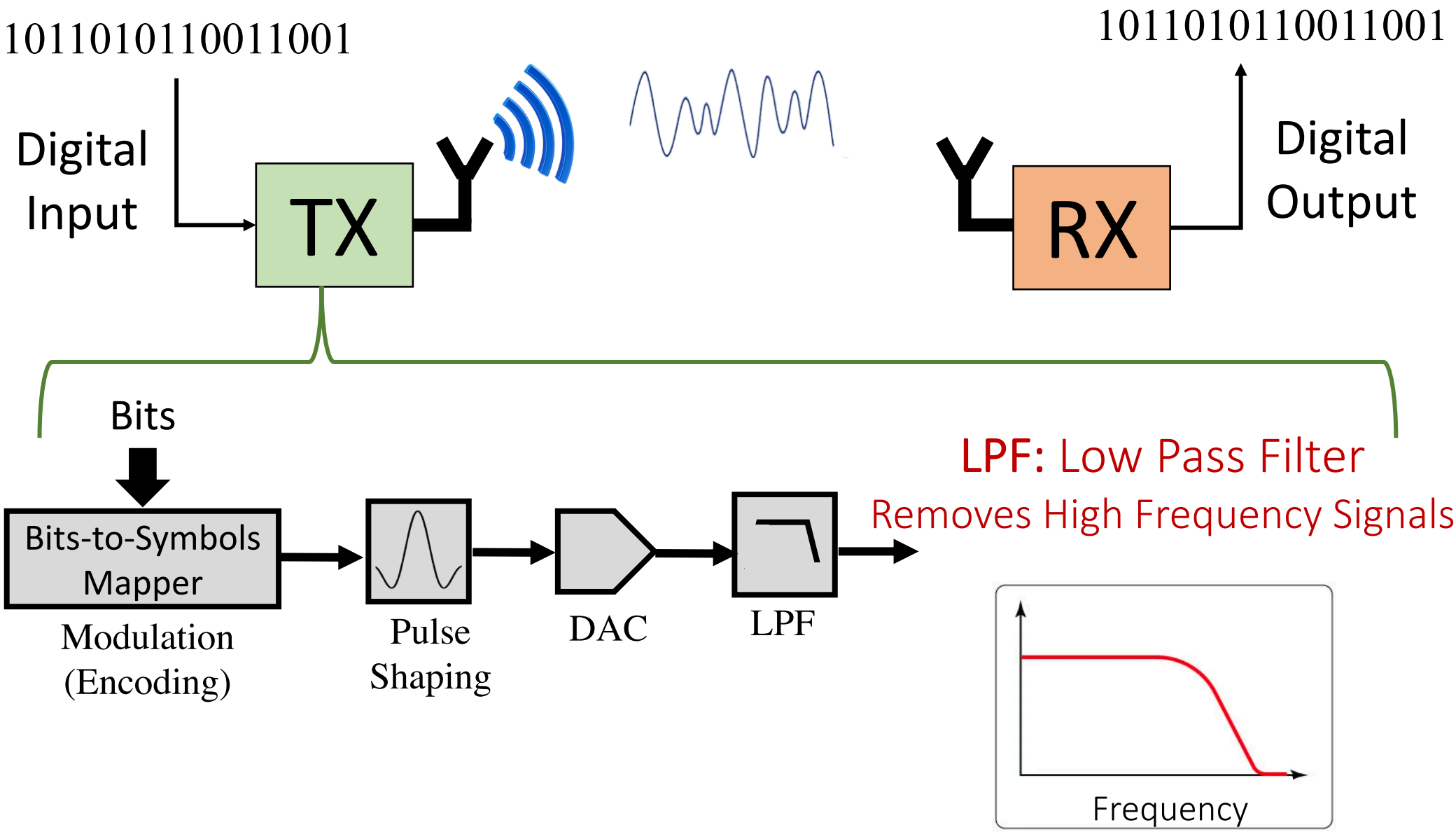

Wireless Communication System

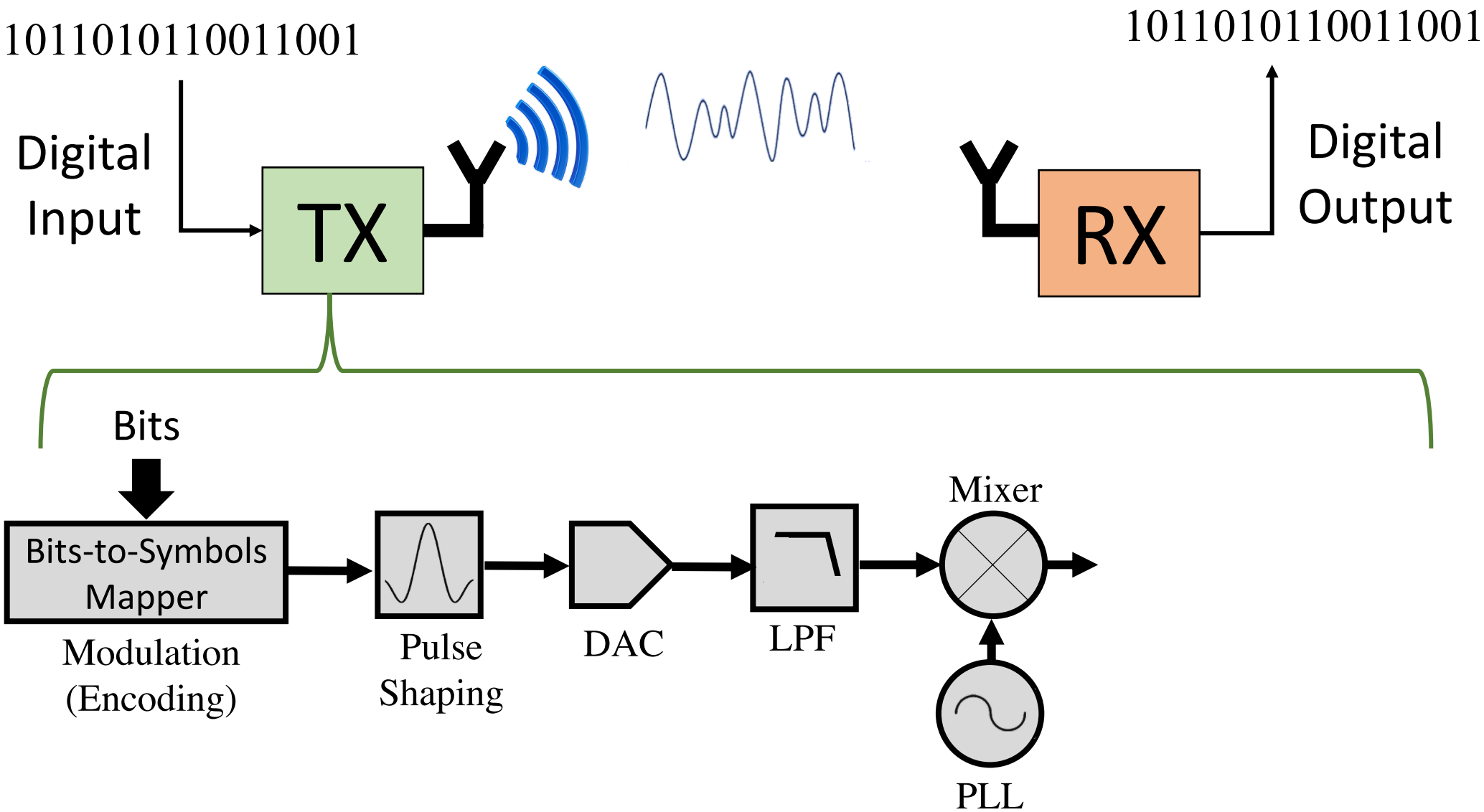

Mixer/PLL: Move signal to desired frequency of operation

Wireless Communication System

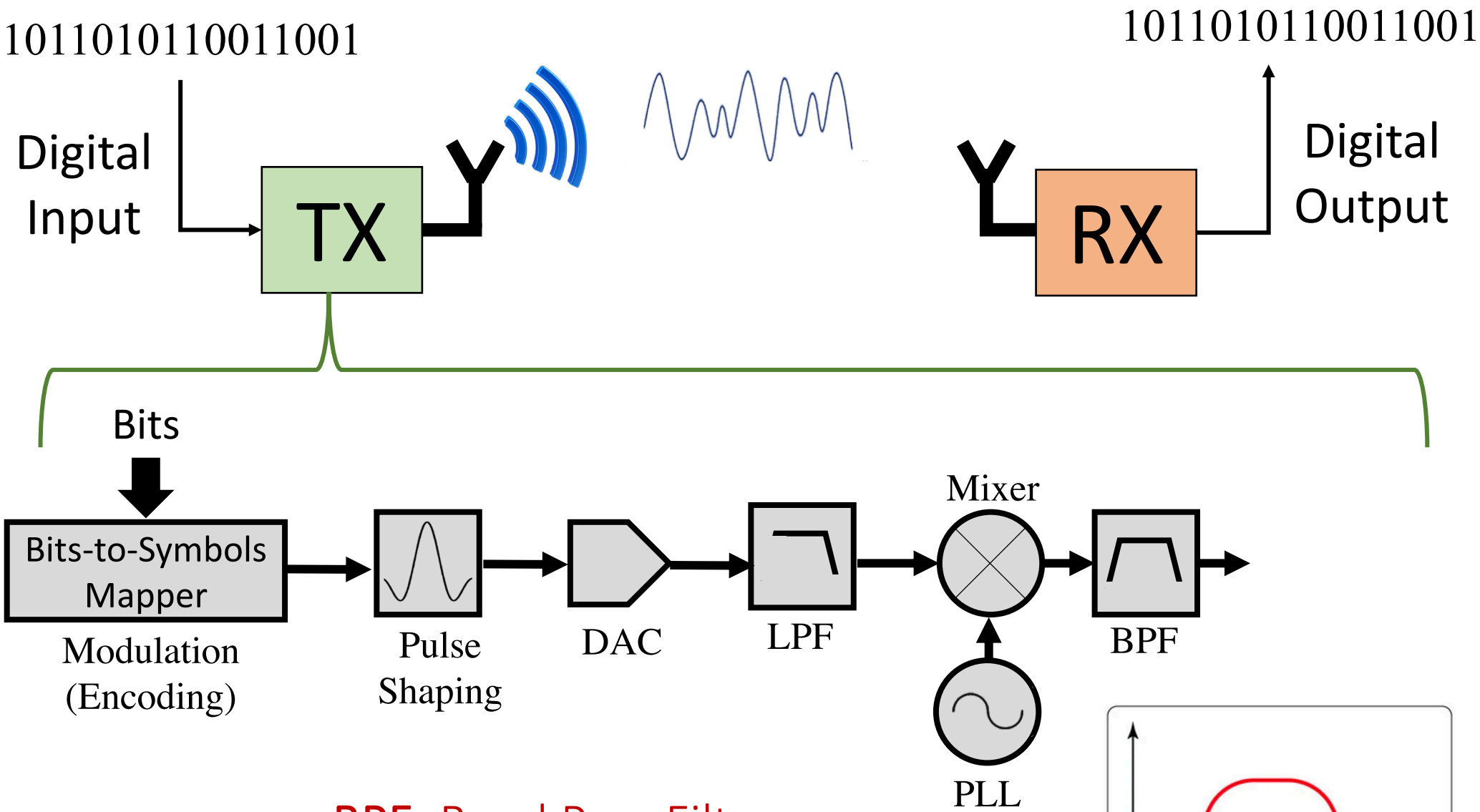

BPF: Band Pass Filter

Removes Frequency Signals outside desired frequency of operation

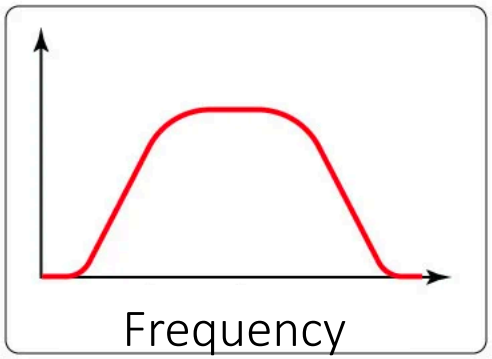

Wireless Communication System

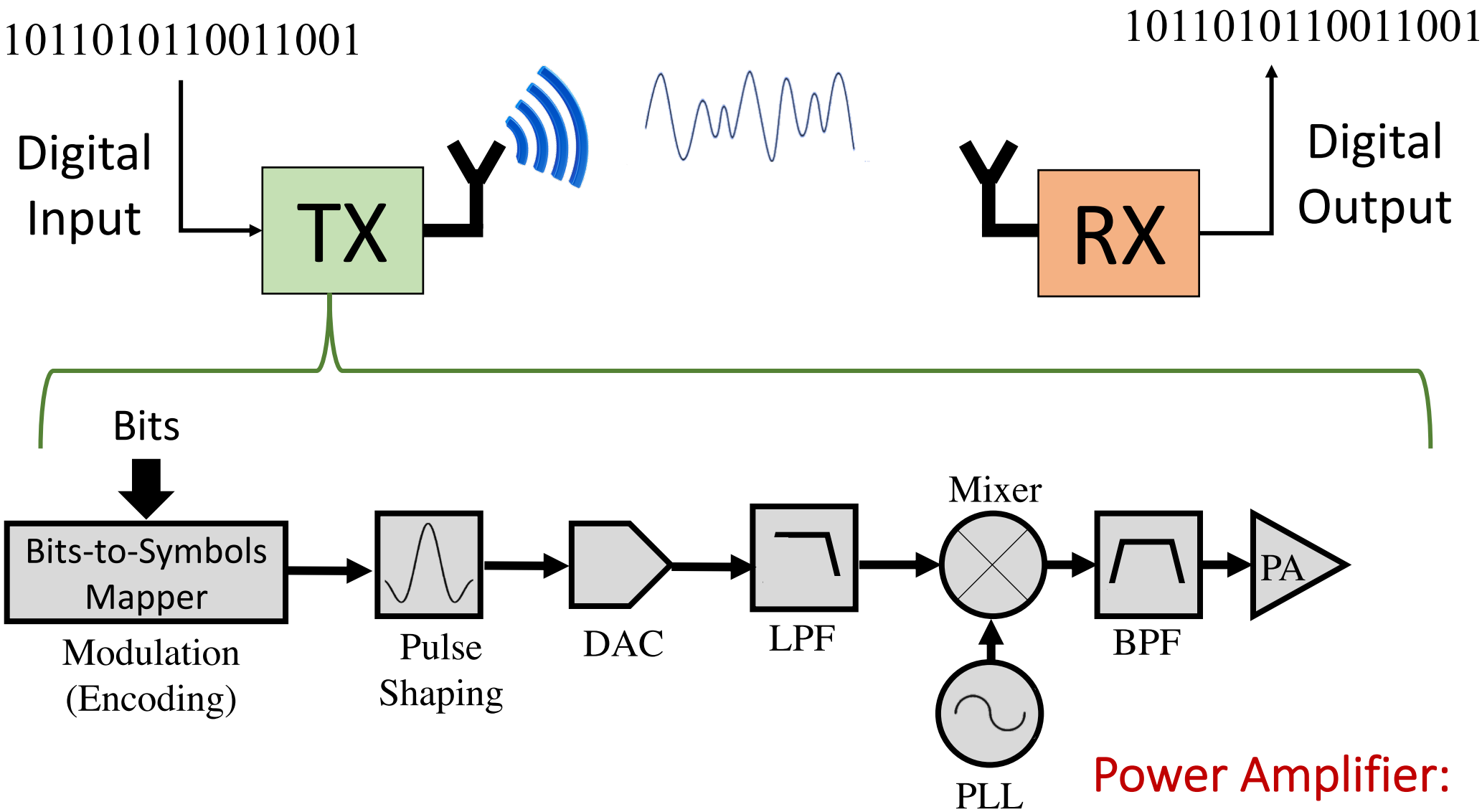

Power Amplifier:
Amplify signal power

Wireless Communication System

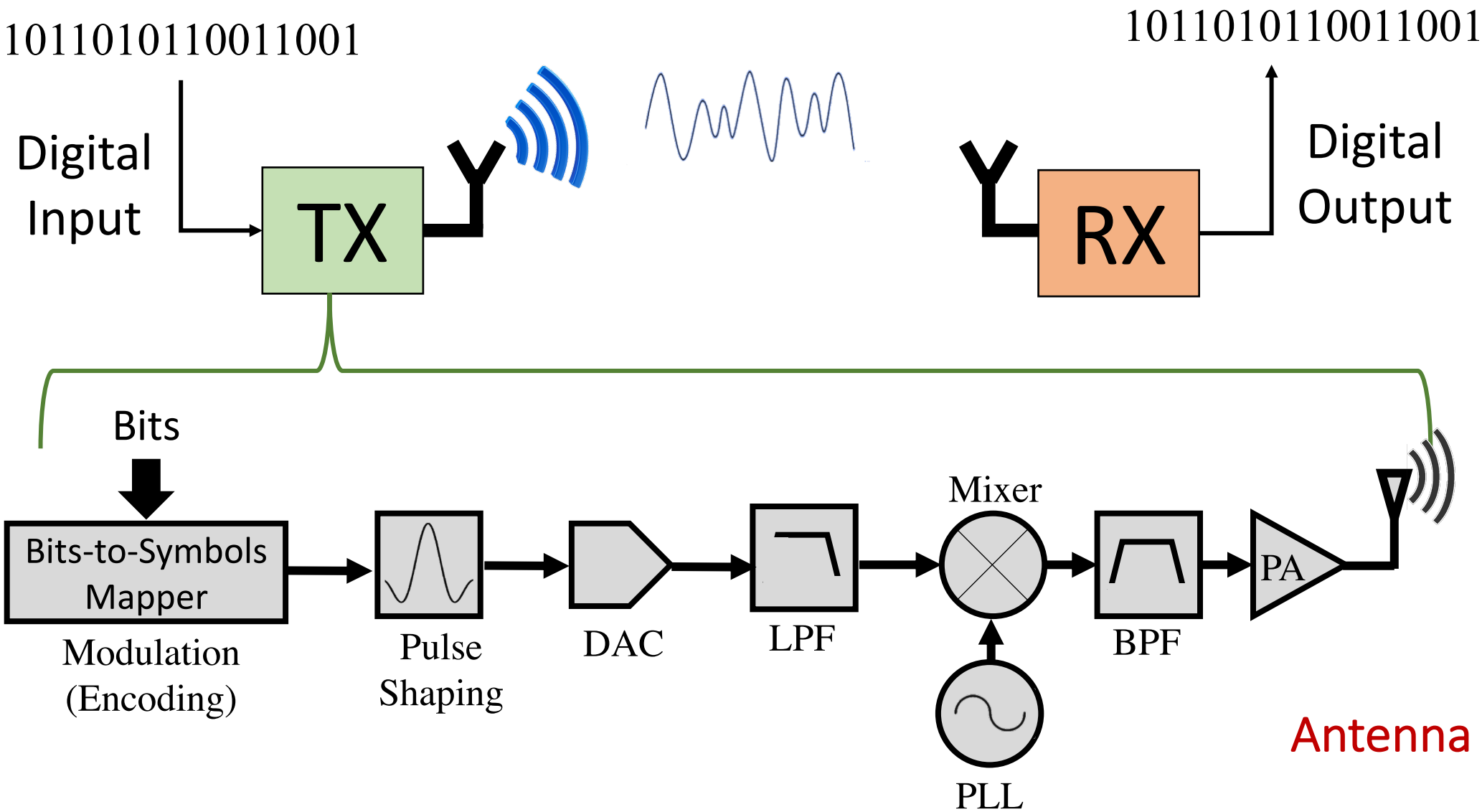

Wireless Communication System

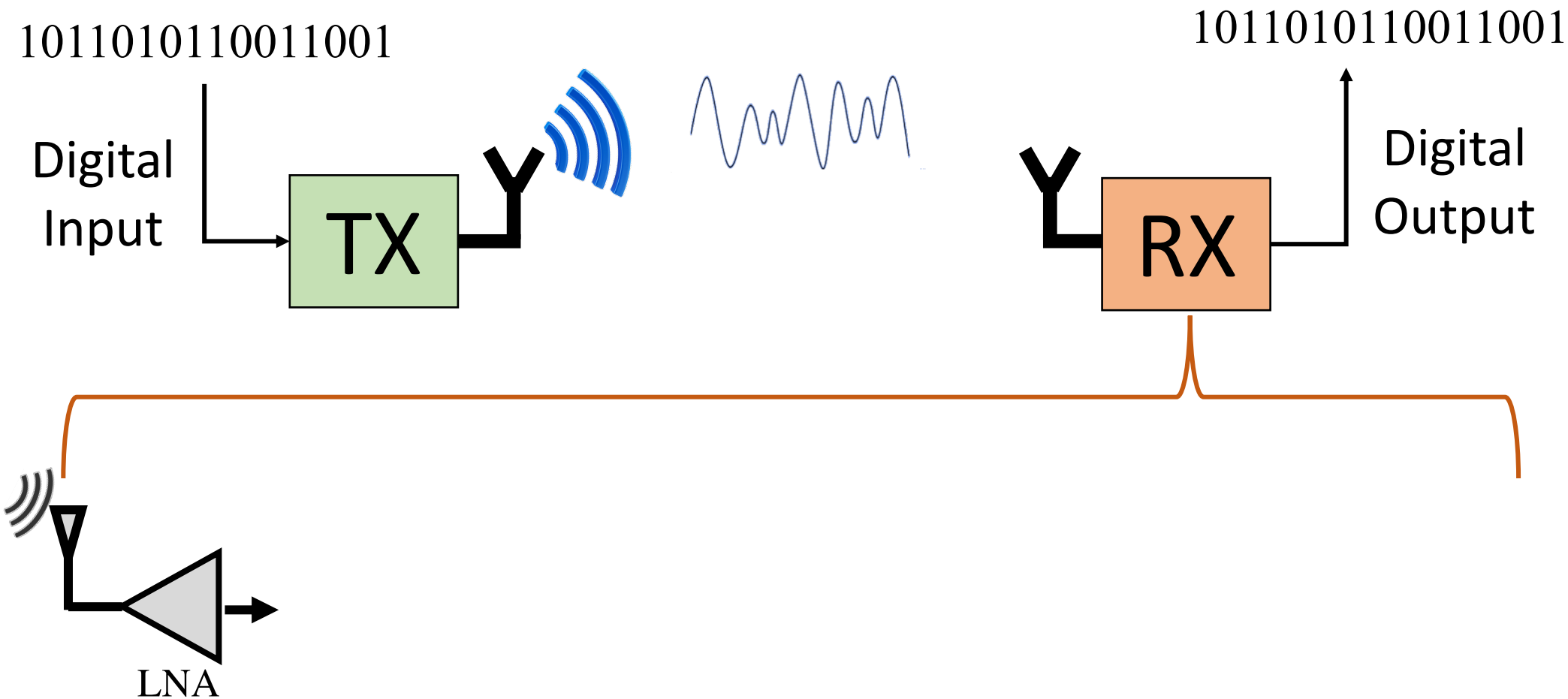

Low Noise Amplifier:

Amplify signal power with minimal noise

Wireless Communication System

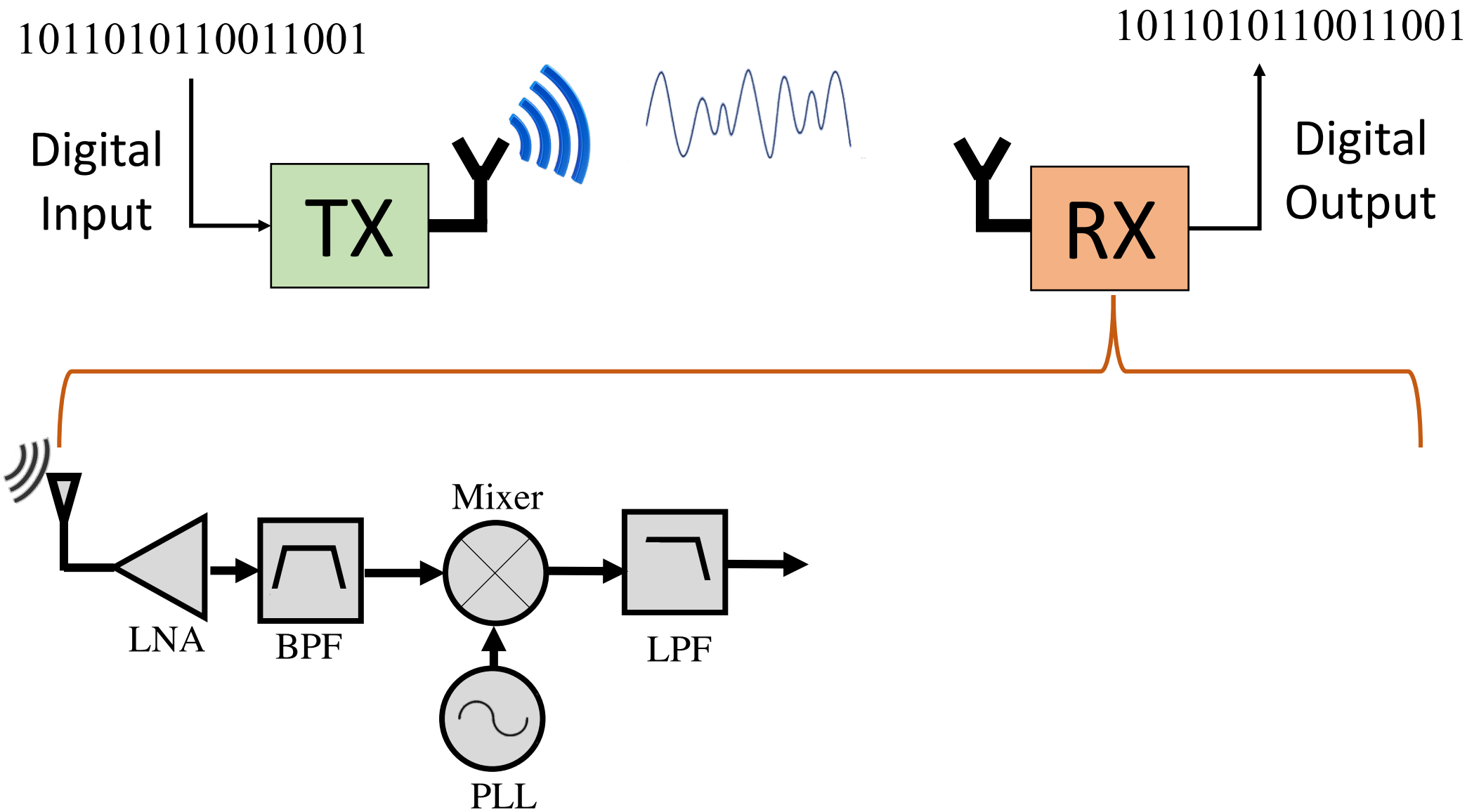

Wireless Communication System

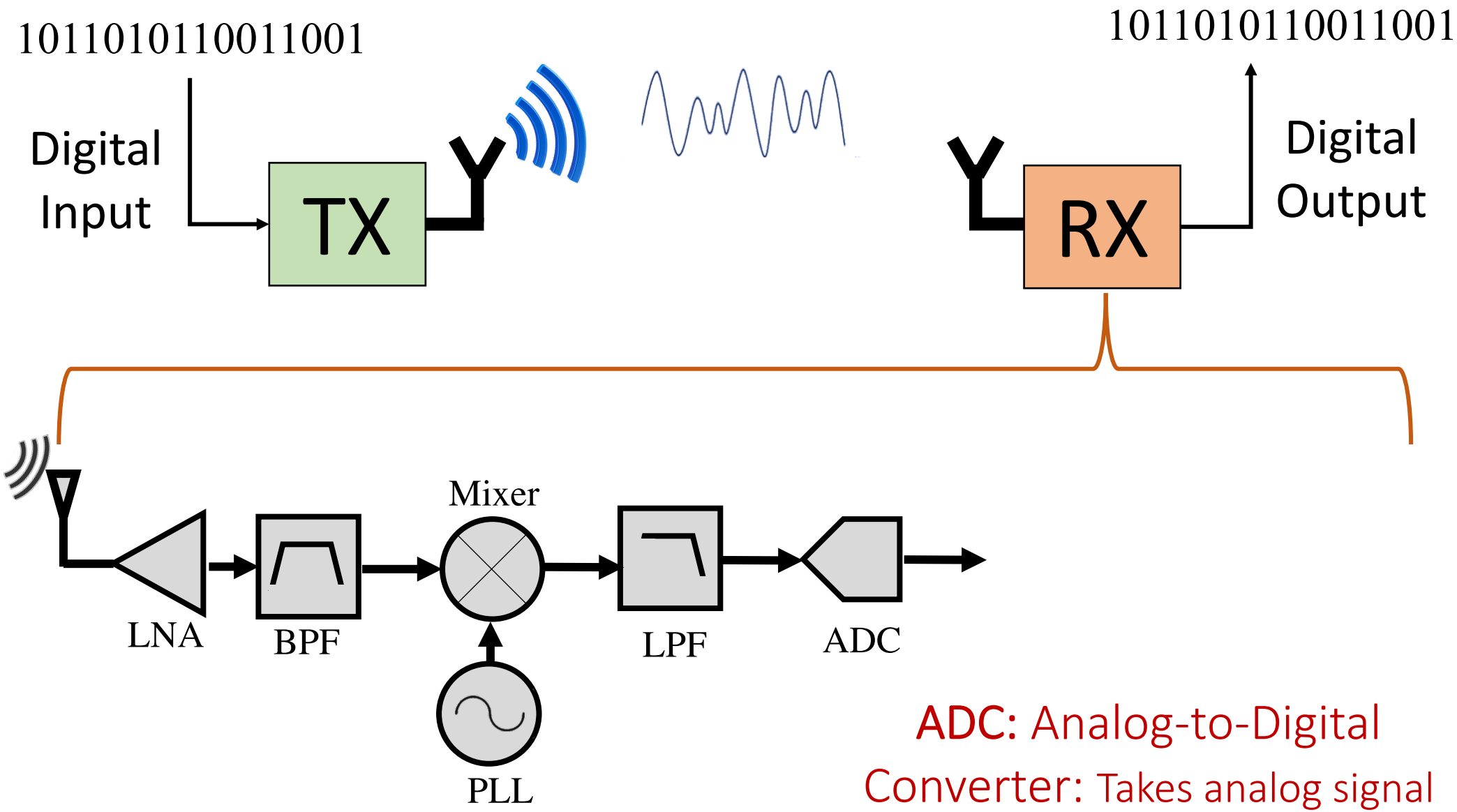

ADC: Analog-to-Digital Converter: Takes analog signal and digitizes it, i.e. samples and quantizes the signal values.

Wireless Communication System

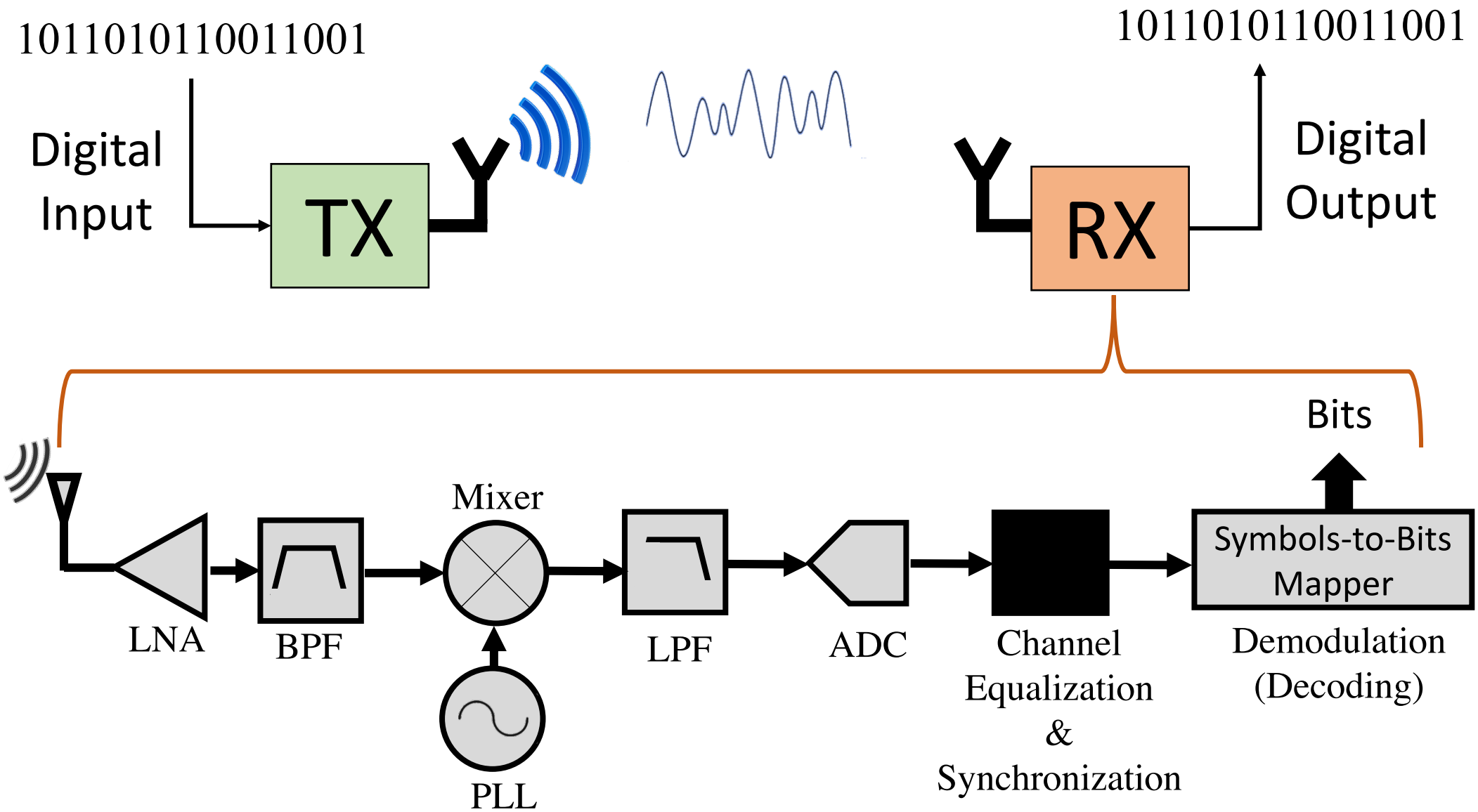

Wireless Communication System

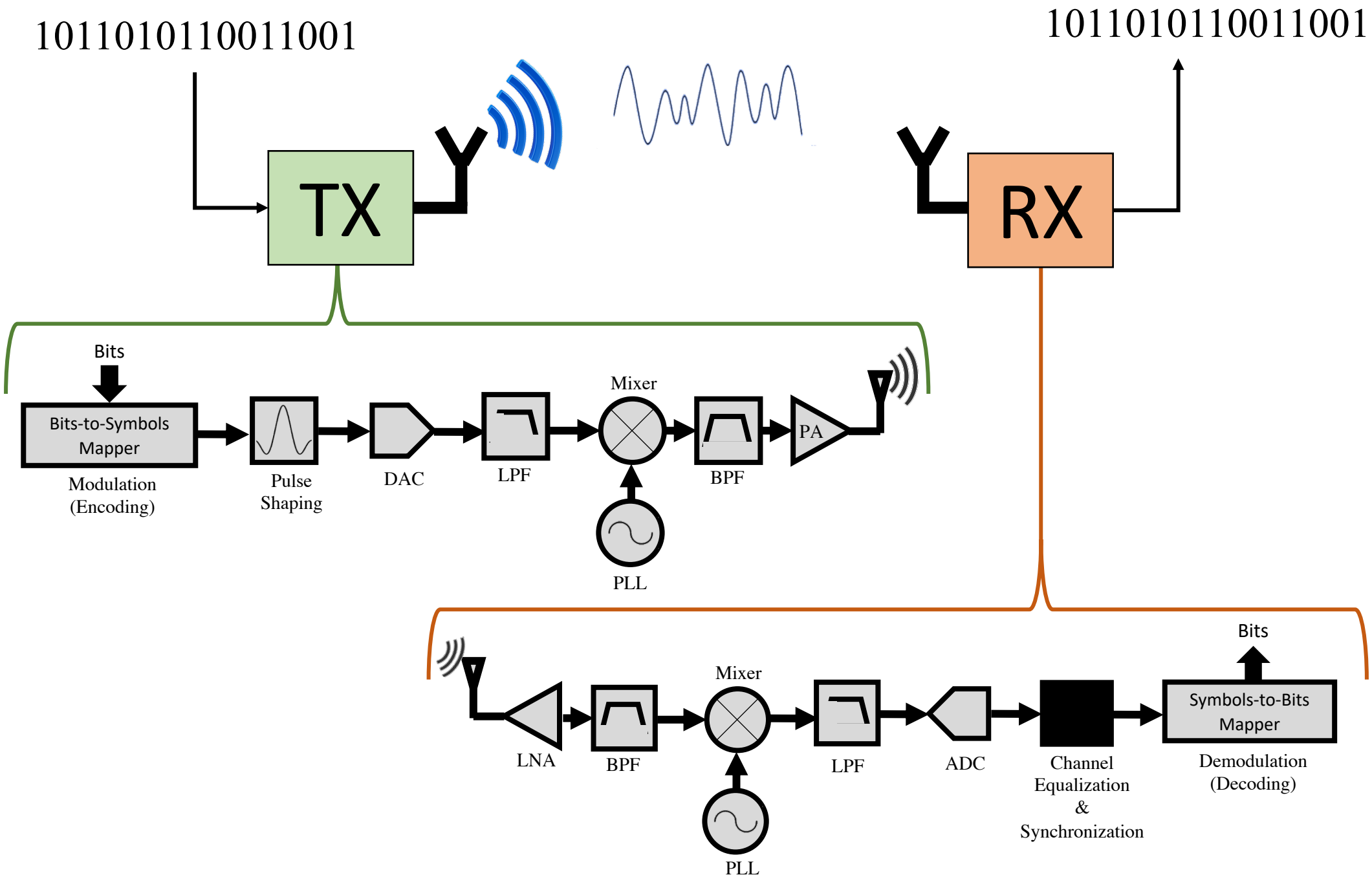

Pace and Difficulty so Far

A. Too Fast & Too Hard

B. Too Fast & Not Too Hard

C. Good Speed & Too Hard

D. Good Speed & Not Too Hard

This Lecture:

- ✓ Class Logistics
- ✓ Introduction to Wireless Communications
- ✓ Wireless Spectrum
- ✓ Transmitter & Receiver System Components
- ❑ Review of Fourier Transforms & Trigonometric Identities
- ❑ Up Conversion & Down Conversion

Trigonometric Identities

$$\cos^2(f) = \frac{1 + \cos(2f)}{2}$$

$$\sin^2(f) = \frac{1 - \cos(2f)}{2}$$

$$\cos(f)\sin(f) = \frac{\sin(2f)}{2}$$

Fourier Transform

$$s(t) \longrightarrow S(f) = \mathcal{F}\{s(t)\} = \int s(t)e^{-j2\pi tf}\, dt$$

$$S(f) \longrightarrow s(t) = \mathcal{F}^{-1}\{S(f)\} = \int S(f)e^{j2\pi tf}\, df$$

Fourier Transform

$$s(t) = \Pi\left(\frac{t}{T}\right)$$

$$S(f) = T\mathrm{sinc}(\pi T f)$$

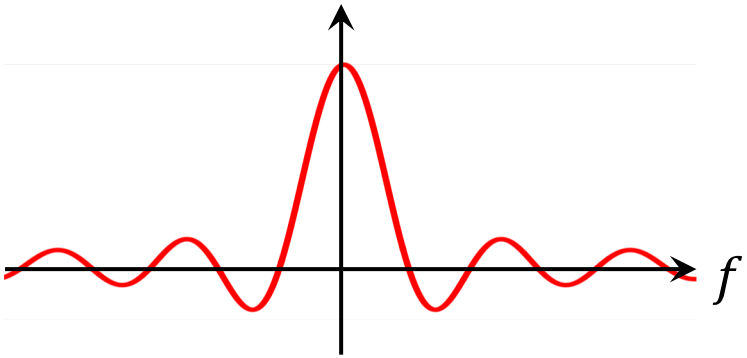

$$\mathrm{sinc}(x) = \frac{\sin(x)}{x}$$

Unit Impulse

Pulse function: $\delta(t - a)$

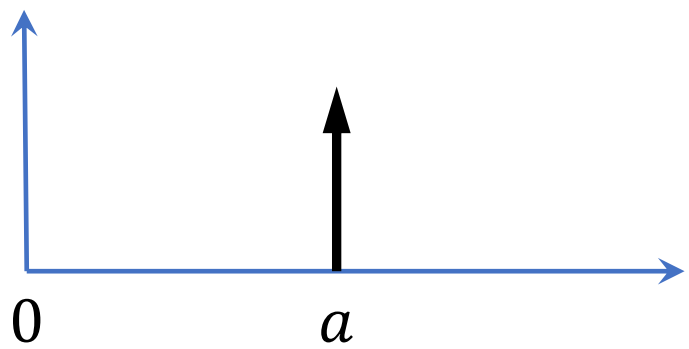

Fourier Transform

$$s(t) = \cos(2\pi f_c t) \longrightarrow S(f) = \frac{1}{2}\delta(f - f_c) + \frac{1}{2}\delta(f + f_c)$$

$$s(t) = \sin(2\pi f_c t) \longrightarrow S(f) = \frac{1}{2}\delta(f - f_c) - \frac{1}{2}\delta(f + f_c)$$

$$s(t) = e^{-j2\pi f_c t} \longrightarrow S(f) = \delta(f - f_c)$$

$$s(t) = \delta(t - a) \longrightarrow S(f) = e^{-j2\pi f a}$$

Convolutions

$$s(t) * h(t) \quad = \int_{-\infty}^{+\infty} s(\tau)h(t-\tau)d\tau$$

$$s[n] * h[n] \quad = \sum_{-\infty}^{\infty} s[m]h[n-m]$$

$$s(t) * \delta(t-a) = s(t \ -a)$$

Convolution in Time is equivalent to
Multiplication in Frequency & vice versa

$$s(t) * h(t) \longrightarrow S(f) \times H(f)$$

$$s(t) \times h(t) \longrightarrow S(f) * H(f)$$

This Lecture:

- ✓ Class Logistics
- ✓ Introduction to Wireless Communications
- ✓ Wireless Spectrum
- ✓ Transmitter & Receiver System Components
- ✓ Review of Fourier Transforms & Trigonometric Identities
- ❑ Up Conversion & Down Conversion

Wireless Communication System

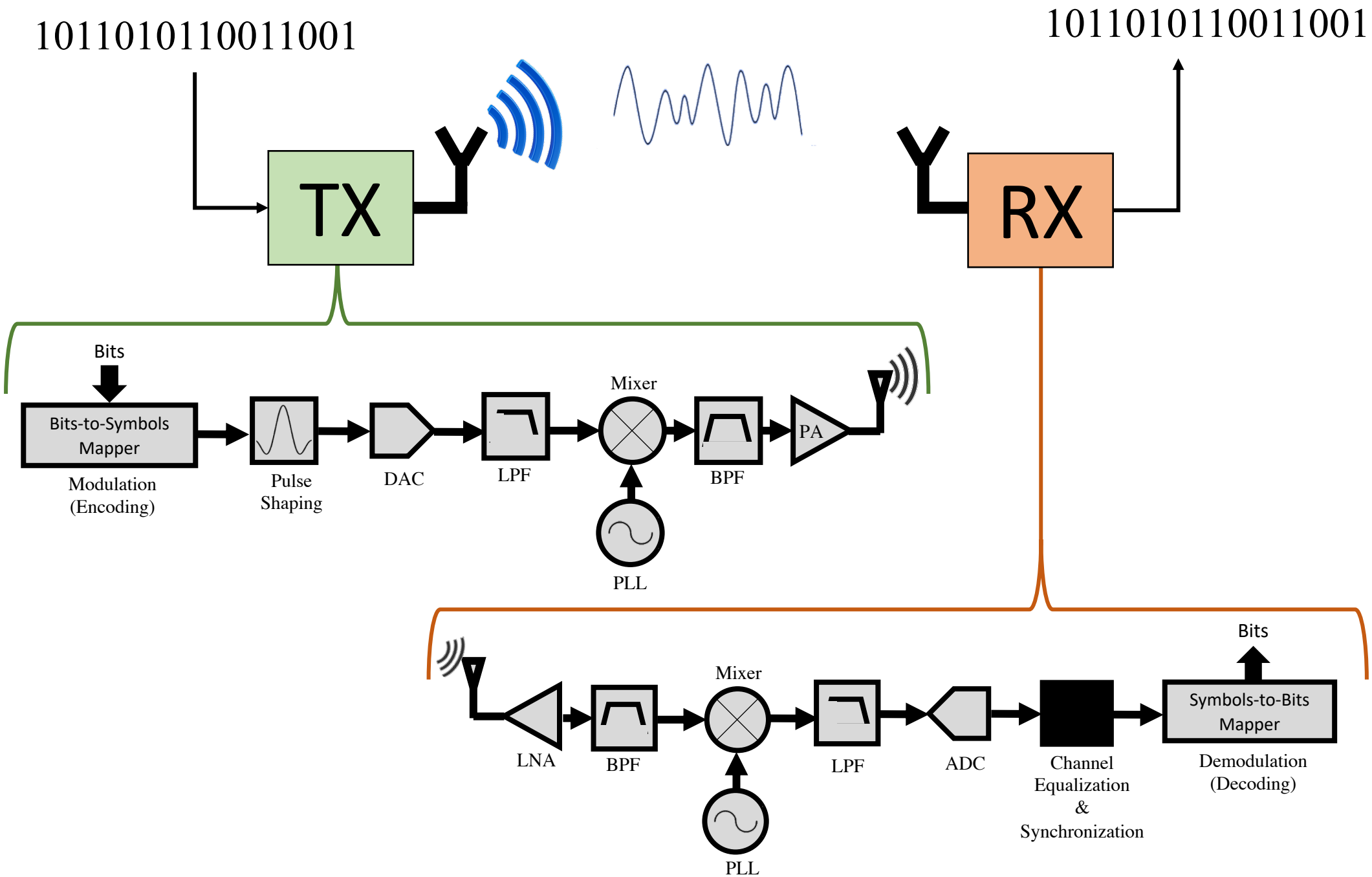

Wireless Communication System

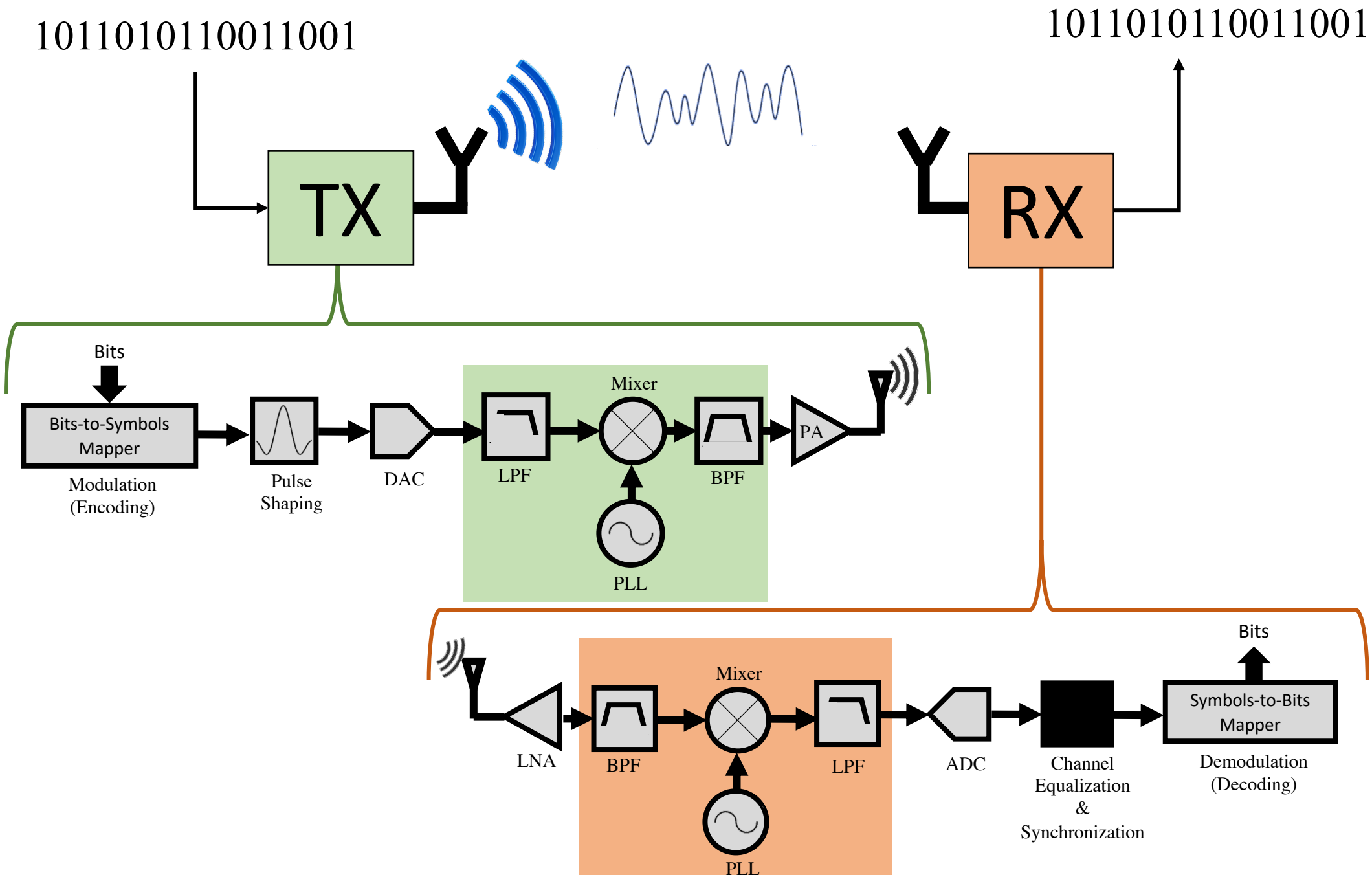

Up/Down Conversion

Transmitter
Up-conversion

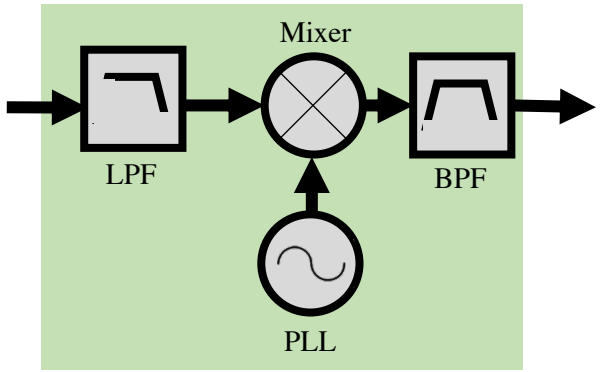

Receiver
Down-conversion

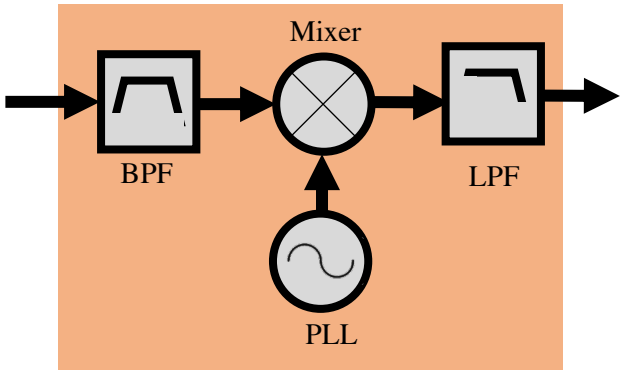

Baseband

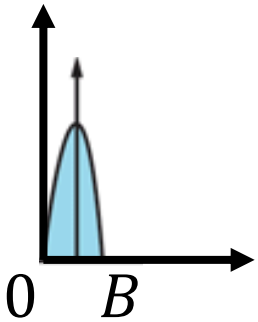

Passband

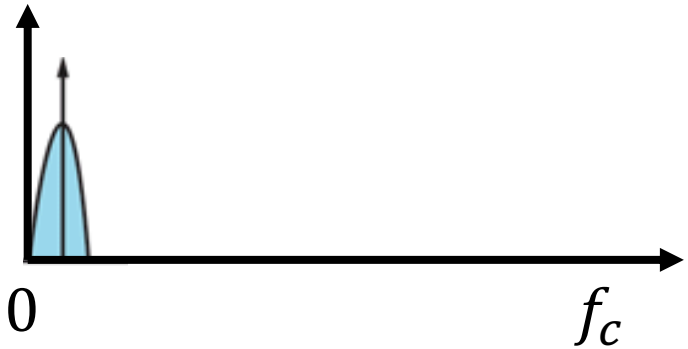

Up/Down Conversion

Transmitter
Up-conversion

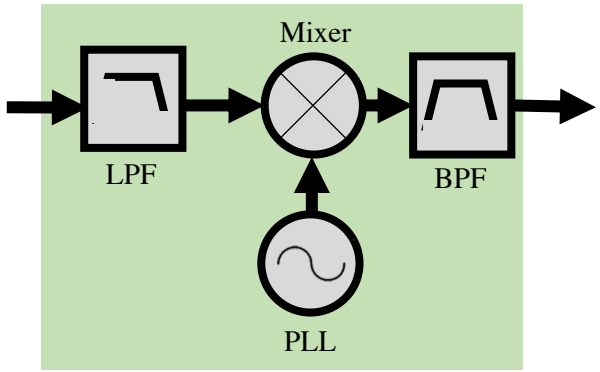

Receiver
Down-conversion

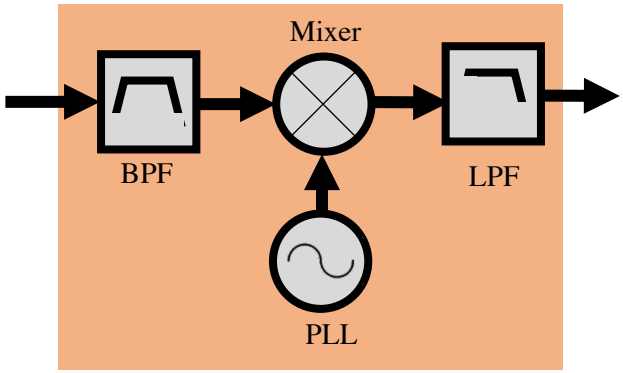

Baseband

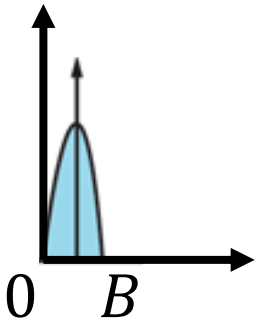

Passband

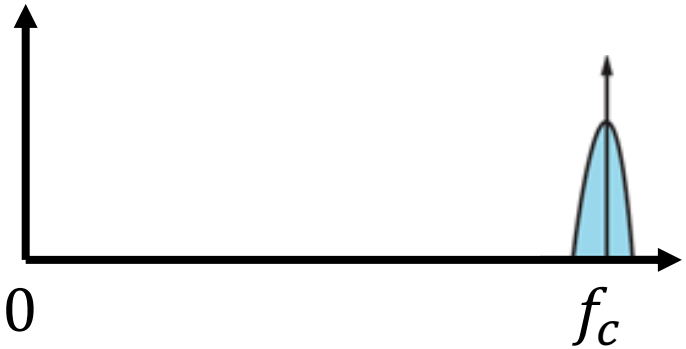

Baseband

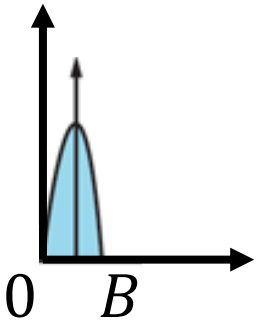

Why do we need to up/down conversion?

Up/Down Conversion

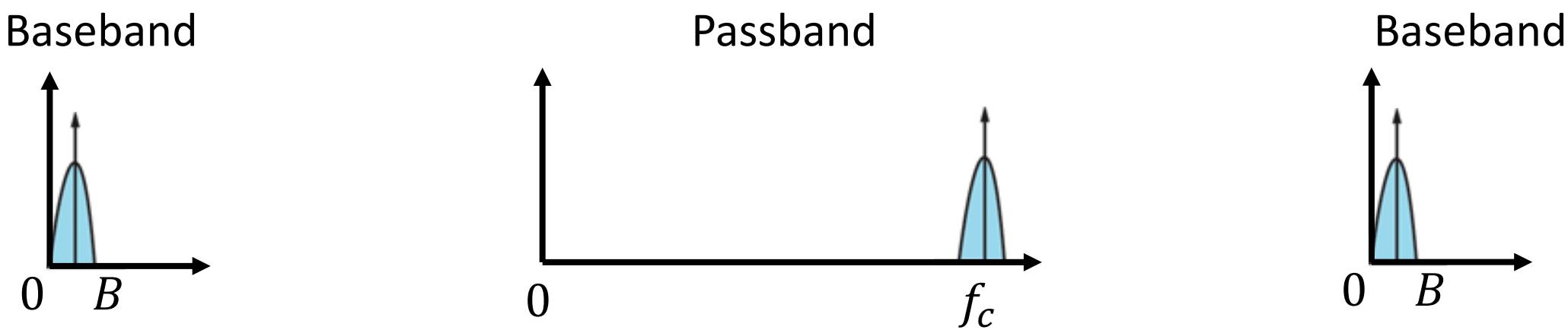

Why do we need to up/down conversion?

Up/Down Conversion

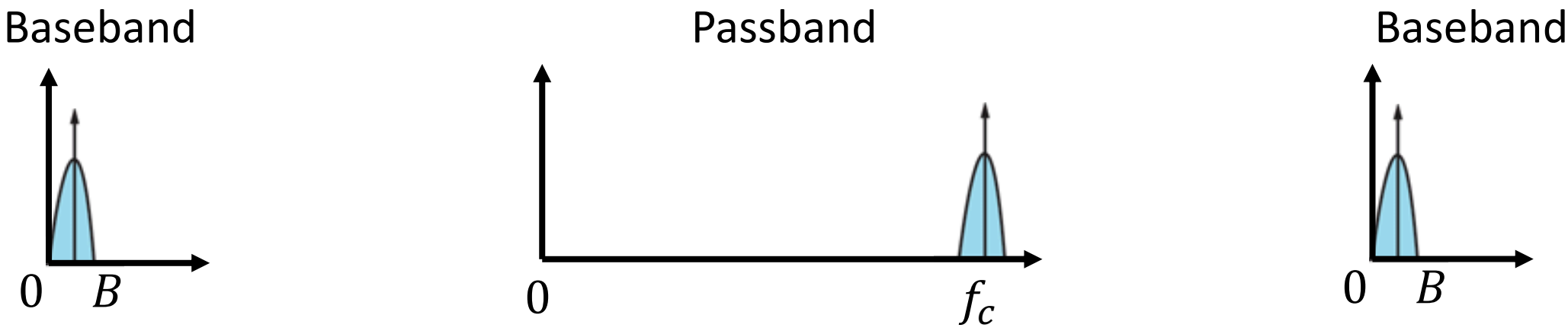

Why do we need to up/down conversion?

- Why not transmit everything at lower frequencies?
  - **Not enough bandwidth:**
    - Data rate ∝ bandwidth
    - Different Technologies
  - **Antenna size** ∝ wavelength

The Wireless Spectrum

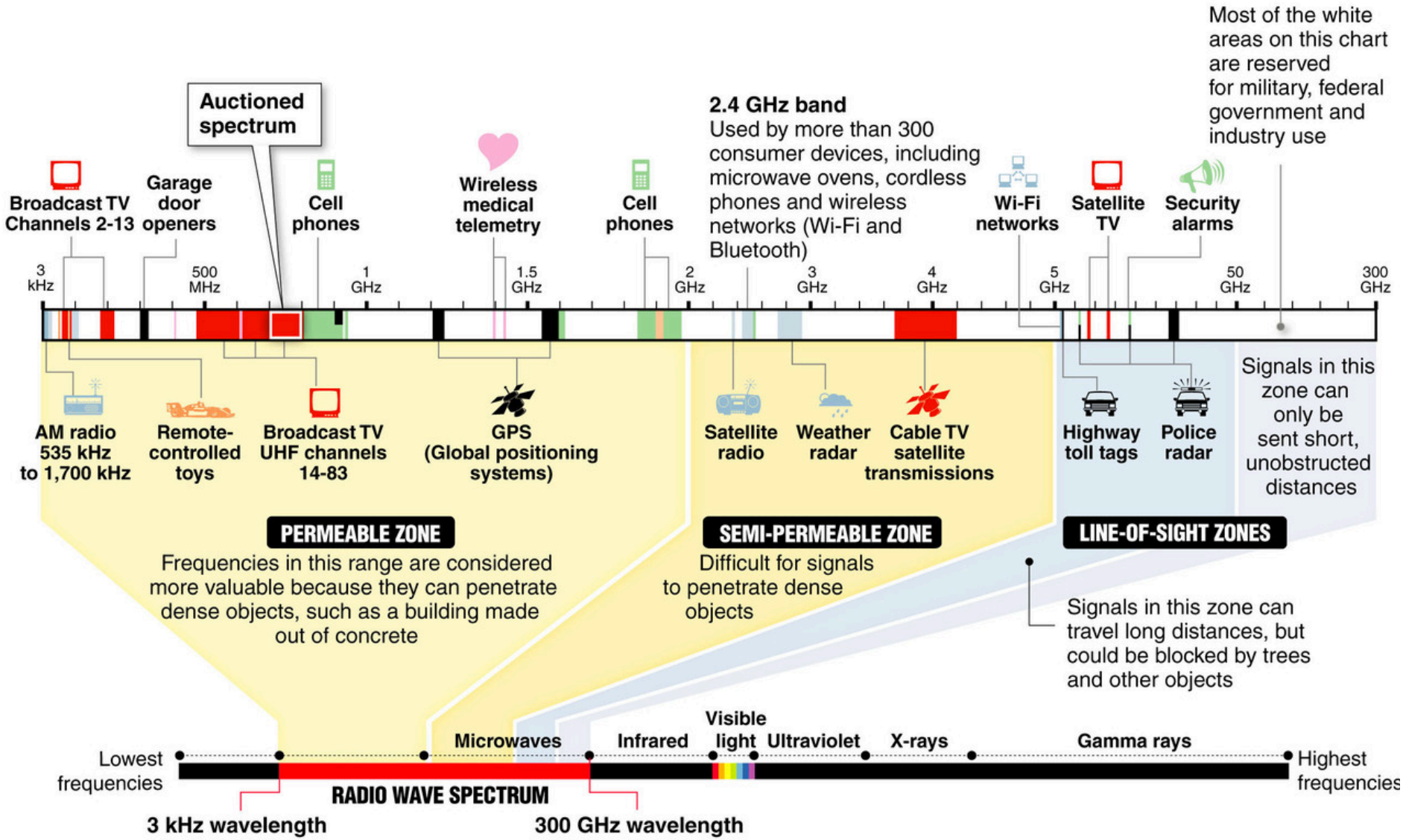

Up/Down Conversion

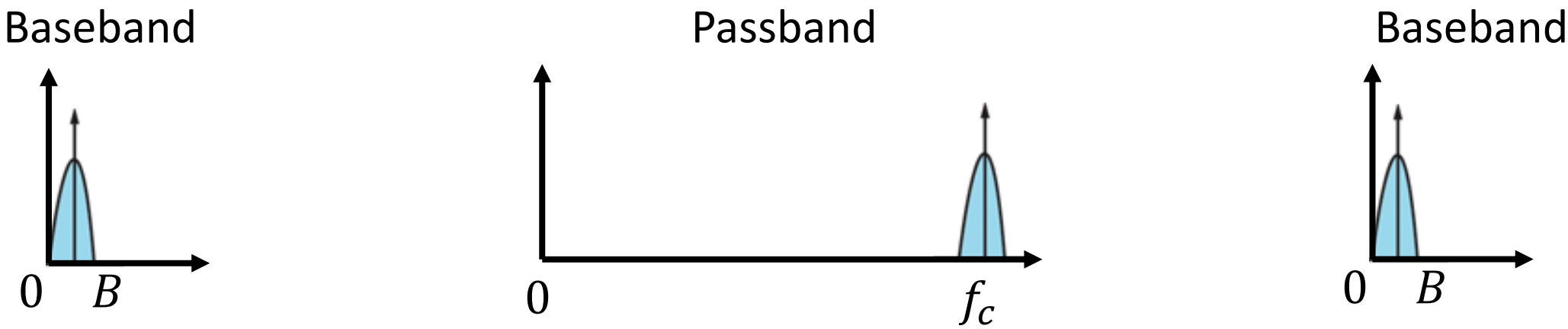

Why do we need to up/down conversion?

- Cannot transmit everything at low frequencies.

- Why not transmit & receive directly at high frequency?

Nyquist!

Nyquist Theorem

To recover the signal properly, we need to sample at twice the highest frequency, i.e. $2f_{max}$

Baseband

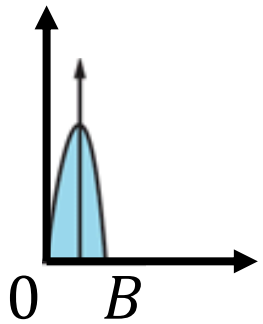

➡ Sample at $2B$

e.g. WiFi 802.11b ≈ 40 MS/s

Passband

➡ Sample at $2f_c + B$

e.g. WiFi 802.11b ≈ 5 GS/s

Up/Down Conversion

Transmitter
Up-conversion

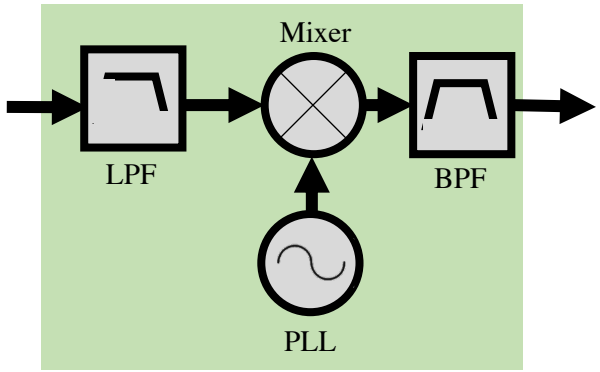

Receiver
Down-conversion

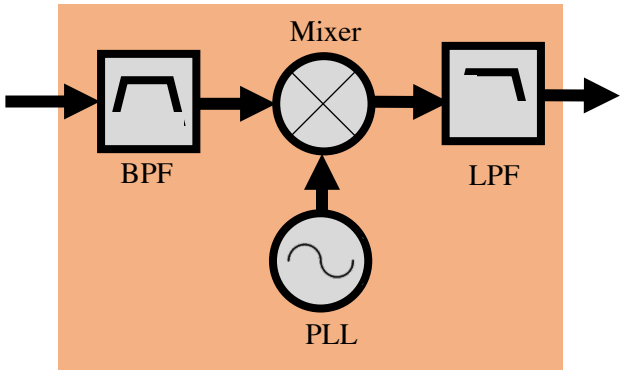

How to we do up/down conversion?

$$s(t) \longrightarrow \times \longrightarrow s(t)\cos(2\pi f_c t)$$

$$\uparrow$$

$$\cos(2\pi f_c t)$$

- PLL (Phased Lock Loop): create the cosine wave signal $\cos(2\pi f_c t)$
- Mixer: multiples the two signals

Up/Down Conversion

Transmitter
Up-conversion

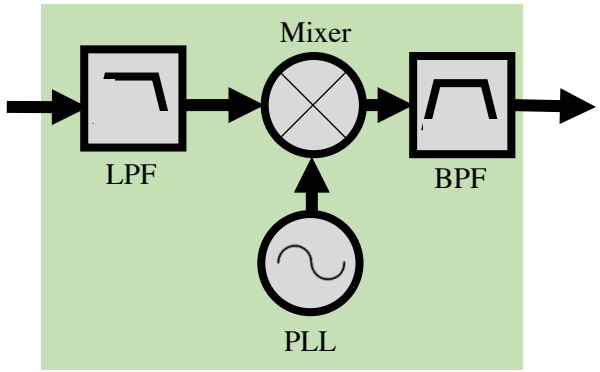

Receiver
Down-conversion

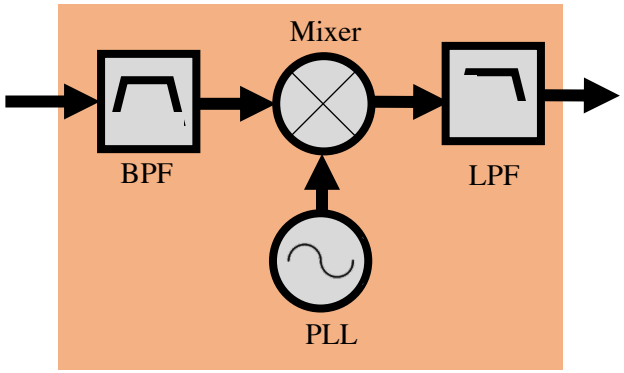

How to we do up/down conversion?

$$s(t) \longrightarrow \times \longrightarrow s(t)\cos(2\pi f_c t) \longrightarrow \times \longrightarrow s(t)\cos^2(2\pi f_c t)$$

$$\uparrow \qquad\qquad\qquad\qquad \uparrow$$

$$\cos(2\pi f_c t) \qquad\qquad\qquad \cos(2\pi f_c t)$$

$$s(t)\cos^2(2\pi f_c t) = s(t)\left(\frac{1}{2} + \frac{1}{2}\cos(2\pi\, 2 f_c\, t)\right)$$

Up/Down Conversion

Transmitter
Up-conversion

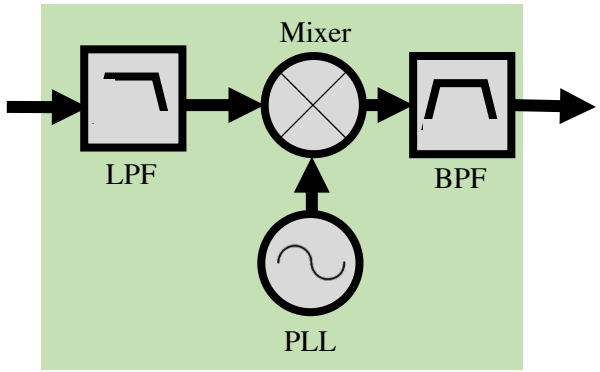

Receiver
Down-conversion

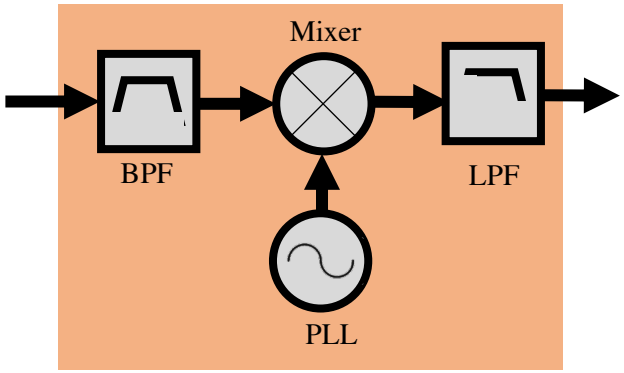

How to we do up/down conversion?

$$s(t) \longrightarrow \times \longrightarrow s(t)\cos(2\pi f_c t) \longrightarrow \times \longrightarrow s(t)\cos^2(2\pi f_c t)$$

$$\uparrow \qquad\qquad\qquad\qquad \uparrow$$

$$\cos(2\pi f_c t) \qquad\qquad\qquad \cos(2\pi f_c t)$$

$$s(t)\cos^2(2\pi f_c t) = s(t)\left(\frac{1}{2} + \frac{1}{2}\cos(2\pi\, 2f_c\, t)\right) = \frac{1}{2}s(t)$$

Low Pass Filter

Up/Down Conversion

$$s(t) \longrightarrow \times \longrightarrow s(t)\cos(2\pi f_c t) \longrightarrow \times \longrightarrow s(t)\cos^2(2\pi f_c t)$$

$$\uparrow \qquad\qquad\qquad\qquad \uparrow$$

$$\cos(2\pi f_c t) \qquad\qquad\qquad\qquad \cos(2\pi f_c t)$$

Up/Down Conversion

$$s(t) \longrightarrow \times \longrightarrow s(t)\cos(2\pi f_c t) \longrightarrow \times \longrightarrow s(t)\cos^2(2\pi f_c t)$$

$$\uparrow \qquad\qquad\qquad\qquad \uparrow$$

$$\cos(2\pi f_c t) \qquad\qquad\qquad \cos(2\pi f_c t)$$

Consider using PAM: Pulse Amplitude Modulation

4 PAM:
2 bits/symbol

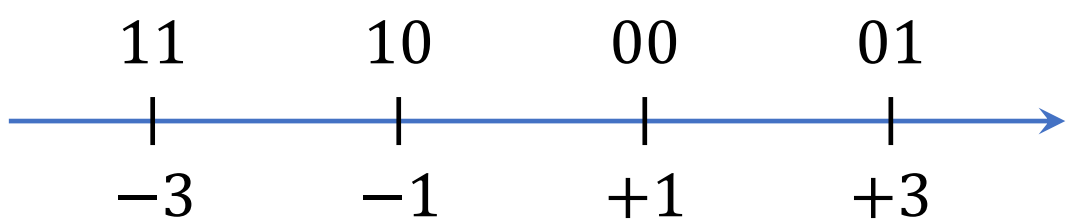

$s(t)$ is real ➔ $S(f)$ is symmetric around 0

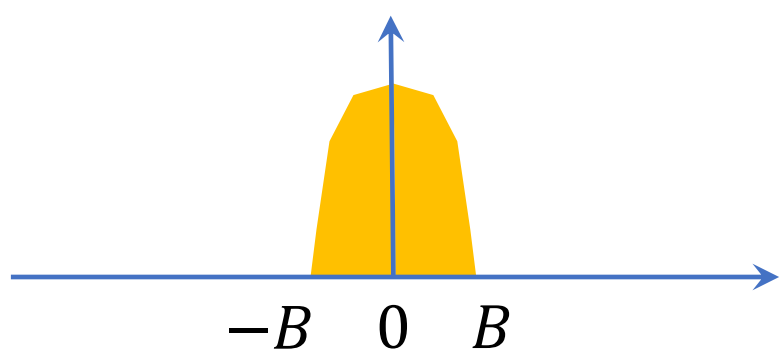

Up/Down Conversion

$$s(t) \longrightarrow \times \longrightarrow s(t)\cos(2\pi f_c t) \longrightarrow \times \longrightarrow s(t)\cos^2(2\pi f_c t)$$

$$\cos(2\pi f_c t) \qquad\qquad \cos(2\pi f_c t)$$

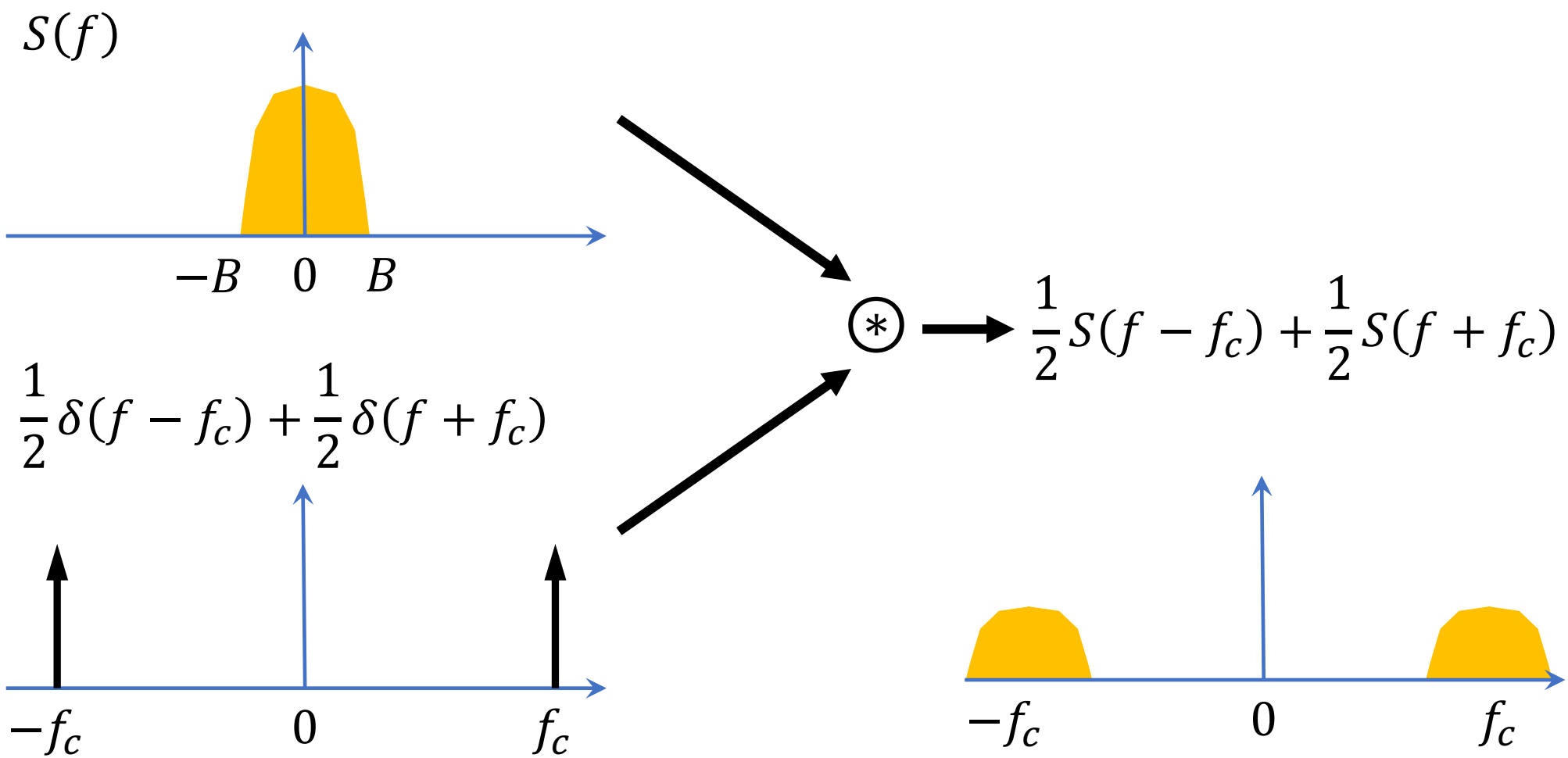

Up/Down Conversion

$$s(t) \longrightarrow \times \longrightarrow s(t)\cos(2\pi f_c t) \longrightarrow \times \longrightarrow s(t)\cos^2(2\pi f_c t)$$

$$\uparrow \cos(2\pi f_c t) \qquad\qquad \uparrow \cos(2\pi f_c t)$$

$$\frac{1}{2}S(f-f_c)+\frac{1}{2}S(f+f_c)$$

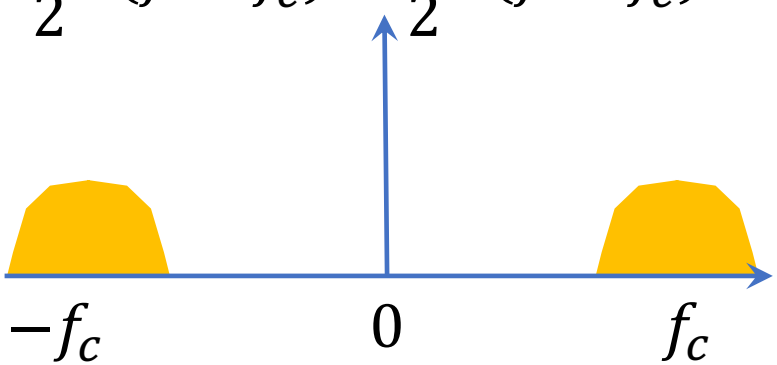

$$\frac{1}{2}\delta(f-f_c)+\frac{1}{2}\delta(f+f_c)$$

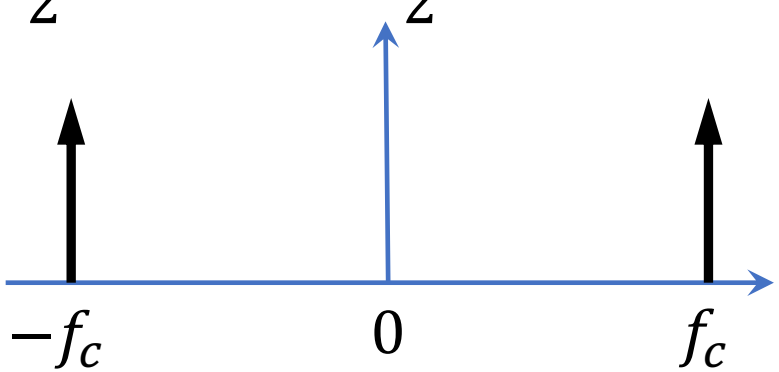

$$\circledast \longrightarrow \frac{1}{4}S(f-2f_c)+\frac{1}{4}S(f)$$

$$+\frac{1}{4}S(f)+\frac{1}{4}S(f+2f_c)$$

Up/Down Conversion

$$s(t) \longrightarrow \times \longrightarrow s(t)\cos(2\pi f_c t) \longrightarrow \times \longrightarrow s(t)\cos^2(2\pi f_c t)$$

$$\uparrow \cos(2\pi f_c t) \qquad\qquad \uparrow \cos(2\pi f_c t)$$

$$\frac{1}{2}S(f-f_c)+\frac{1}{2}S(f+f_c)$$

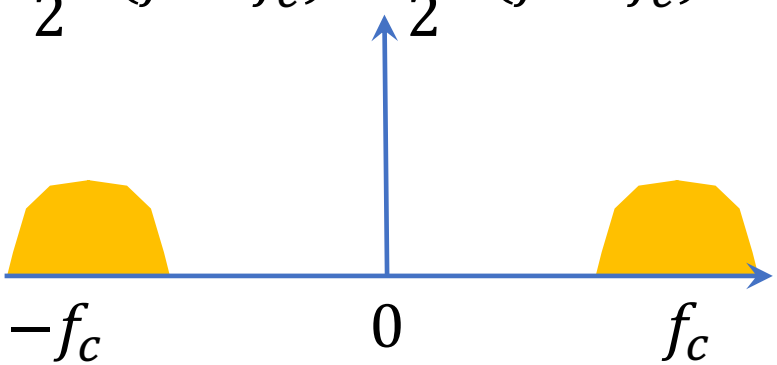

$$\frac{1}{2}\delta(f-f_c)+\frac{1}{2}\delta(f+f_c)$$

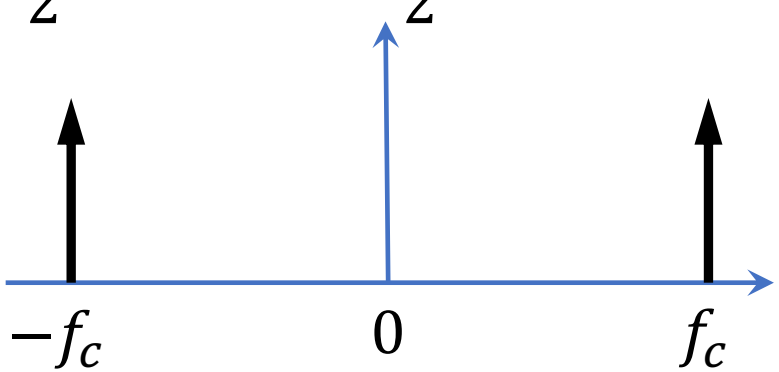

$$\circledast \longrightarrow \frac{1}{4}S(f-2f_c)+\frac{1}{4}S(f+2f_c)+\frac{1}{2}S(f)$$

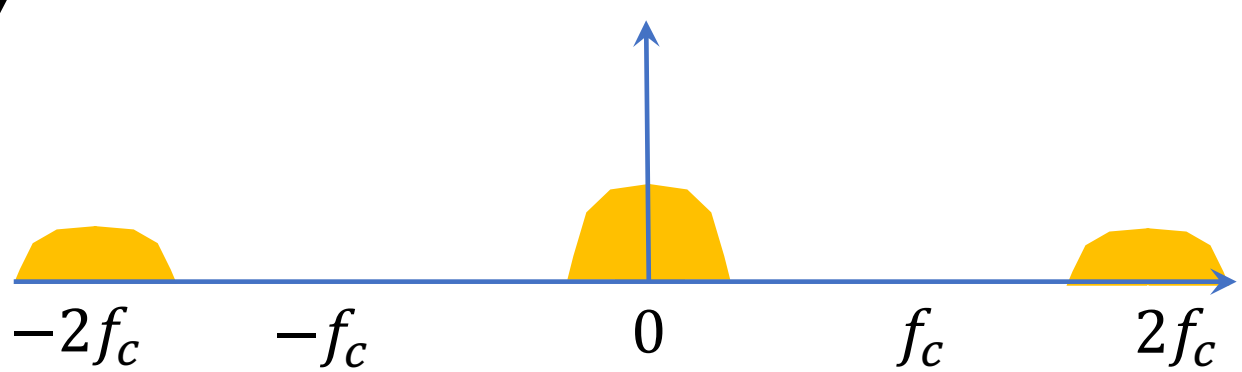

Up/Down Conversion

$$s(t) \longrightarrow \times \longrightarrow s(t)\cos(2\pi f_c t) \longrightarrow \times \longrightarrow s(t)\cos^2(2\pi f_c t)$$

$$\uparrow \qquad\qquad\qquad\qquad \uparrow$$

$$\cos(2\pi f_c t) \qquad\qquad\qquad \cos(2\pi f_c t)$$

$$\frac{1}{2}S(f-f_c)+\frac{1}{2}S(f+f_c)$$

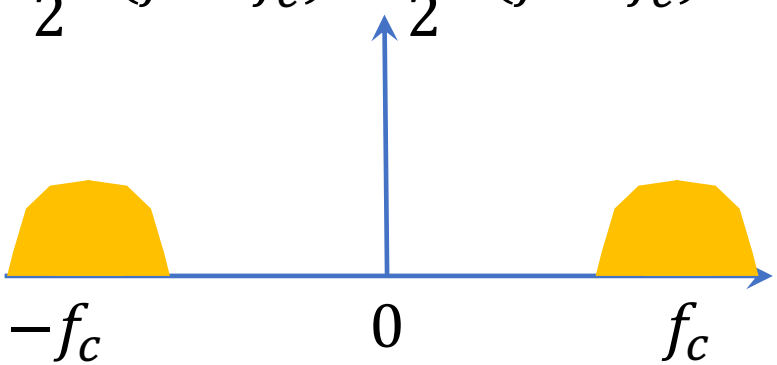

$$\frac{1}{2}\delta(f-f_c)+\frac{1}{2}\delta(f+f_c)$$

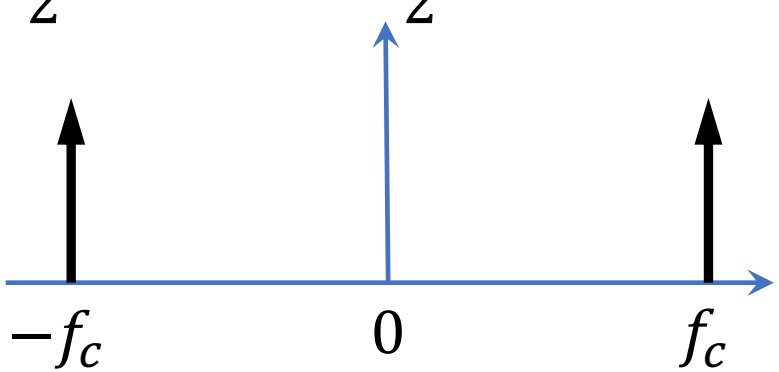

$$\circledast \longrightarrow \frac{1}{4}S(f-2f_c)+\frac{1}{4}S(f+2f_c)+\frac{1}{2}S(f)$$

Low Pass Filter

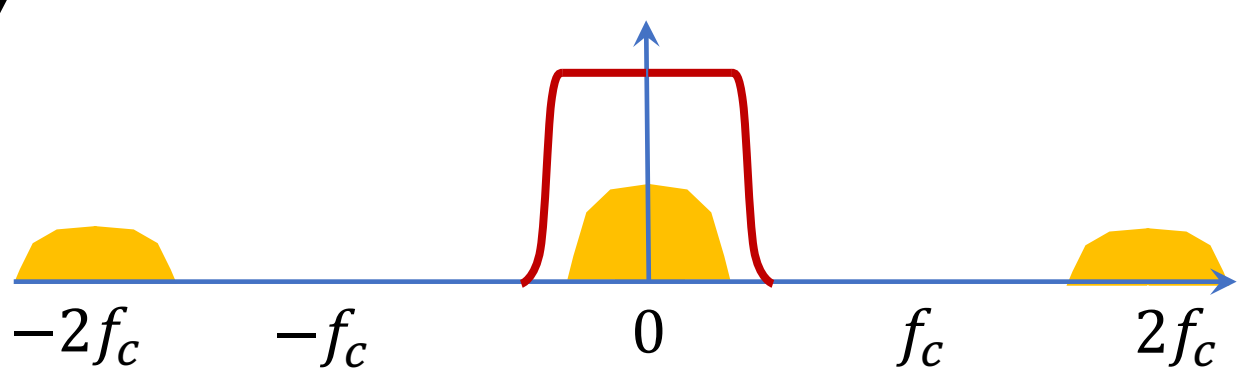

Is Up & Down conversion clear so far?

- Yes
- No

List of Mathematical Terms That Appeared in the Lecture

- f_c: Carrier Frequency
- B: Signal Bandwidth
- $s(t)$: Baseband Signal
- $S(f)$: Frequency Spectrum of Baseband Signal
- $\delta(f)$: Impulse Function
- $\circledast$: Convolution Operator
- n: Symbol index at TX
- $x(t)$: Baseband Signal
- $\Pi(\quad)$: Rectangle Function
- $\mathrm{sinc}(\quad)$: Sinc Function
- $(\quad)^*$: Complex Conjugate
- $|\quad|$: Magnitude
- $\mathcal{F}\{\quad\}$: Fourier Transform
- $\mathcal{F}^{-1}\{\quad\}$: Inverse Fourier Transform